Chipsmall Limited consists of a professional team with an average of over 10 year of expertise in the distribution of electronic components. Based in Hongkong, we have already established firm and mutual-benefit business relationships with customers from,Europe,America and south Asia,supplying obsolete and hard-to-find components to meet their specific needs.

With the principle of “Quality Parts,Customers Priority,Honest Operation,and Considerate Service”,our business mainly focus on the distribution of electronic components. Line cards we deal with include Microchip,ALPS,ROHM,Xilinx,Pulse,ON,Everlight and Freescale. Main products comprise IC,Modules,Potentiometer,IC Socket,Relay,Connector.Our parts cover such applications as commercial,industrial, and automotives areas.

We are looking forward to setting up business relationship with you and hope to provide you with the best service and solution. Let us make a better world for our industry!

Contact us

Tel: +86-755-8981 8866 Fax: +86-755-8427 6832
Email & Skype: info@chipsmall.com Web: www.chipsmall.com
Address: A1208, Overseas Decoration Building, #122 Zhenhua RD., Futian, Shenzhen, China

NOTES:
1. MATERIALS AND FINISHES:
   BODY – BRASS, NICKEL PLATING
   CONTACT – BERYLLIUM COPPER,SILVER PLATING
   INSULATOR – PTFE, NATURAL
2. ELECTRICAL:
   A. IMPEDANCE: 50 OHM
   B. FREQUENCY RANGE: DC 0–11 GHz
   C. DIELECTRIC WITHSTANDING VOLTAGE: 1500 VRMS, MIN.
3. MECHANICAL:
   A. DURABILITY: 500 CYCLES MIN.
   B. TEMPERATURE RANGE: –40°C to +85°C

THIRD ANGLE PROJ.

REVISIONS

REV	DESCRIPTION	DATE	ECO	APPR
B	SEE SHEET 1	18–Aug–05	– –	ROCKY
B1	SEE SHEET 1	19–Sep–05	– –	ROCKY
T	REDRAWN TO UPDATE FORMAT	22-Dec-08	47238	[illegible]

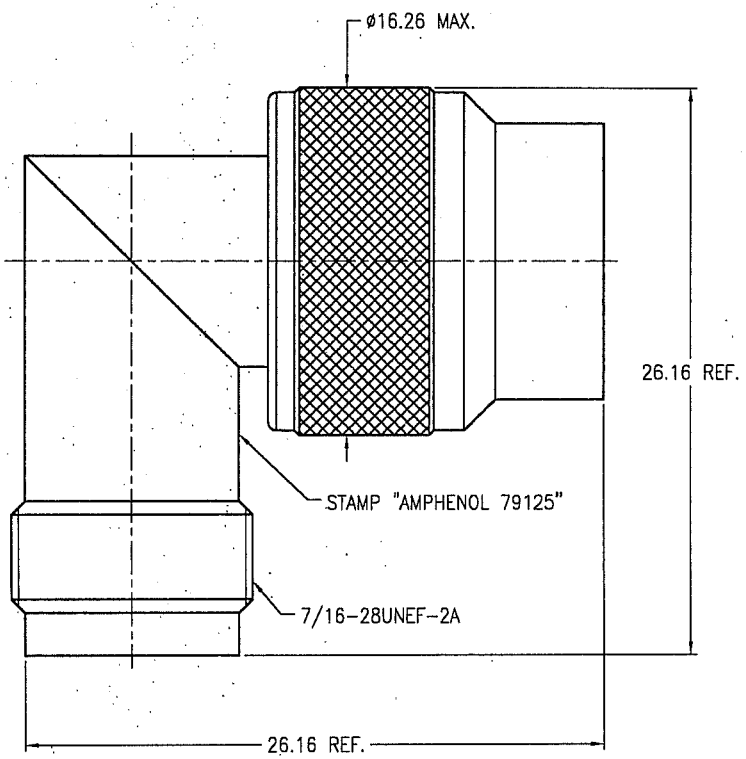

CUSTOMER OUTLINE DRAWING

ALL OTHER SHEETS ARE FOR INTERNAL USE ONLY

UNLESS OTHERWISE SPECIFIED, DIMENSIONS ARE IN METRIC AND TOLERANCES ARE:

0.5 – 6mm	6 – 30mm	30 – 120mm	ANGLES
±0.1mm	±0.2mm	± 0.3mm	±1°

NOTICE – These drawings, specifications, or other data (1) are, and remain the property of Amphenol Corp. (2) must be returned upon request; and (3) are confidential and not to be disclosed to any person other than those to whom they are given by Amphenol Corp. The furnishing of these drawings, specifications, or other data by Amphenol Corp., or to any other person to anyone for any purpose is not to be regarded by implication or otherwise in any manner licensing, granting rights or permitting such holder or any other person to manufacture, use or sell any product, process or design, patented or otherwise, that may in any way be related to or disclosed by said drawings, specifications, or other data.

MATERIAL

REFERENCE

FINISH

DRAWN	DATE
ROCKY	19–Sep–05
ENGINEER	DATE
SCOTT	19–Sep–05
APPROVED	DATE
SCOTT	19–Sep–05

CAD FILE: F:\DWG\CNPD\79125–TSZ

TITLE: TNC RIGHT ANGLE ADAPTOR

SCALE: 3/1	SHEET 2 OF 2	
DWG SIZE	CODE ID	REV
B	74868	T

Amphenol RF
Danbury CT USA, Tainan Taiwan, Shenzhen China
www.amphenolrf.com

DRAWING NO. 79125
ITEM NO. 79125
PART NO. 79125