Chipsmall Limited consists of a professional team with an average of over 10 year of expertise in the distribution of electronic components. Based in Hongkong, we have already established firm and mutual-benefit business relationships with customers from,Europe,America and south Asia,supplying obsolete and hard-to-find components to meet their specific needs.

With the principle of “Quality Parts,Customers Priority,Honest Operation,and Considerate Service”,our business mainly focus on the distribution of electronic components. Line cards we deal with include Microchip,ALPS,ROHM,Xilinx,Pulse,ON,Everlight and Freescale. Main products comprise IC,Modules,Potentiometer,IC Socket,Relay,Connector.Our parts cover such applications as commercial,industrial, and automotives areas.

We are looking forward to setting up business relationship with you and hope to provide you with the best service and solution. Let us make a better world for our industry!

Contact us

Tel: +86-755-8981 8866 Fax: +86-755-8427 6832
Email & Skype: info@chipsmall.com Web: www.chipsmall.com
Address: A1208, Overseas Decoration Building, #122 Zhenhua RD., Futian, Shenzhen, China

41483

PART NO.	ENG. NO.	
02-09-1153	41483-(P901)	
02-09-1154	41483-(P901)L	OBSOLETE
02-09-1155	41483-1(P901)	
02-09-1156	41483-1(P901)L	

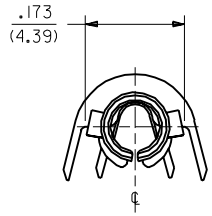

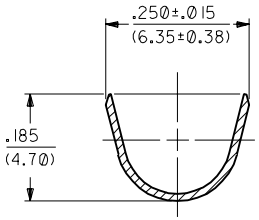

SECT. "A-A"
FOR CRIMP STYLE "A"

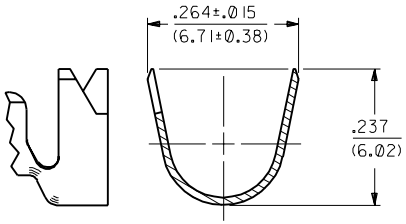

SECT. "A-A"
FOR CRIMP STYLE "B"

ENG. NO. LEGEND

41483-*(****)*

- CRIMP STYLE: BLANK=STYLE "A", 1=STYLE "B"
- FORM: BLANK=CHAIN, L=LOOSE
- P=PREPLATED FINISH, BLANK=POSTPLATED FINISH
- FINISH CODE (SEE NOTE 2)

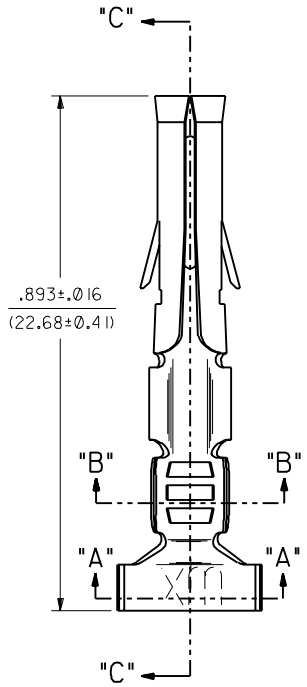

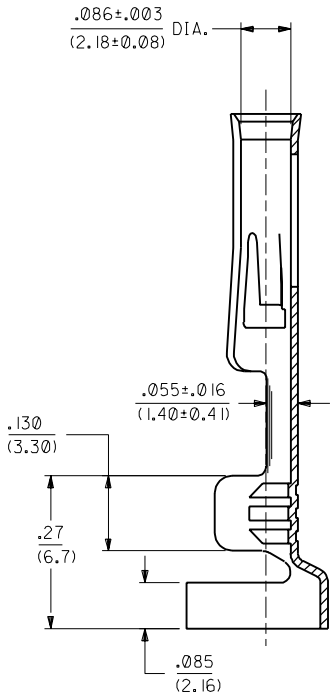

SECT. "C-C"

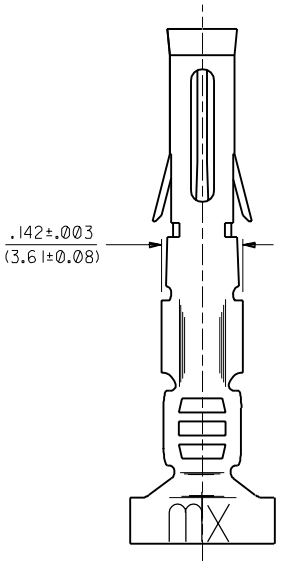

NOTES:

1. MATERIAL: CARTRIDGE BRASS, #C26000 PER ES-124-D209, TEMPER H08(SPRING HARD)
2. FINISH: SEE LEGEND
   901 HOT TIN DIP .000020/(0.00051) MIN.
3. PRODUCT SPECIFICATION: NONE
4. TERMINAL FOR USE WITH .093/(2.36) SERIES HOUSINGS AND WILL ACCEPT 14 THRU 18 AWG WIRE.
   CRIMP SYLE "A" ACCEPTS .180/(4.57) MAX. INSULATION DIA. OR 18 AWG SPT-3 CORD WHEN INSULATION IS CUT OR MANUFACTURED WITHIN THIS DIAMETER. FOR SPT-3 WIRE, IT IS RECOMMENDED THE WIRE BE ORIENTED SO THAT THE INSULATION RADIUS IS FACING THE TOP OF THE CRIMP AFTER CRIMPING.
   CRIMP STYLE "B" INTENDED FOR DOUBLE CRIMPING OF TWO 18 AWG WIRES; ONE HAVING A MAXIMUM INSULATION DIA. OF .170/(4.32) & ONE HAVING A MAX. INSULATION DIA. OF .110/(2.79).
5. THIS PART CONFORMS TO PROD. SPEC. PSX-41483.

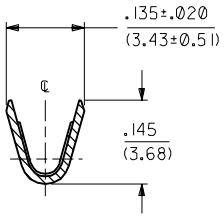

SECT. "B-B"

CHAIN FORM
FULL SCALE

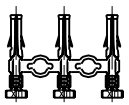

LTR.	REVISIONS
J	OBSOLETE P/N UCR2002-0270 COMERCI 01/10/9
I	ADD COIN TO FLARE UCR2000-0842 6-13-00 RW
H1	REVISE PER UCR2000-0784 DDS 05/24/00
H	REVISE PER ECR U3 0507 GWC 4/1/93 RW
G	REVISE PER ECR U3 0159 GWC 2/2/93 RW
F	REVISE PER ECR U2 0081 GWC 2/24/92 RW
E	REV. & REDRAWN ON CAD. ECR U0 0975 GWC 12/5/90 RW

MFG. | SH. | REV.

REVISE ONLY ON CAD SYSTEM

DIMENSIONS SHOWN (METRIC) INCH

UNLESS OTHERWISE SPECIFIED TOLERANCES: ANGULAR ± 1/2°

		INCH	METRIC
3 PLACE	±	.010	---
2 PLACE	±	.014	± 0.25
1 PLACE		---	± 0.36

DRAFT WHERE APPLICABLE MUST REMAIN WITHIN DIMENSIONS

TITLE: CRIMP TERM., FEMALE .093/(2.36) DIA. FOR 14 THRU 18 AWG. WIRE

MOLEX INCORPORATED, LISLE, ILL. 60532 U.S.A.

SHEET NO.: 1 of 1 | DATE: 12 / 5 / 90

PART NO.: SEE CHART | DRWG. NO.: SD-41483-*

DRWG. BY: GWC | CHK'D. BY: RW | APP'D. BY: GWF | SCALE: 6 : 1

FILE NAME: SD41483X1.DGN

THIS DRAWING CONTAINS INFORMATION THAT IS PROPRIETARY TO MOLEX INC. AND SHOULD NOT BE USED WITHOUT WRITTEN PERMISSION.

DIV.: CP | SIZE: C

41483