Chipsmall Limited consists of a professional team with an average of over 10 year of expertise in the distribution of electronic components. Based in Hongkong, we have already established firm and mutual-benefit business relationships with customers from,Europe,America and south Asia,supplying obsolete and hard-to-find components to meet their specific needs.

With the principle of “Quality Parts,Customers Priority,Honest Operation,and Considerate Service”,our business mainly focus on the distribution of electronic components. Line cards we deal with include Microchip,ALPS,ROHM,Xilinx,Pulse,ON,Everlight and Freescale. Main products comprise IC,Modules,Potentiometer,IC Socket,Relay,Connector.Our parts cover such applications as commercial,industrial, and automotives areas.

We are looking forward to setting up business relationship with you and hope to provide you with the best service and solution. Let us make a better world for our industry!

Contact us

Tel: +86-755-8981 8866 Fax: +86-755-8427 6832
Email & Skype: info@chipsmall.com Web: www.chipsmall.com
Address: A1208, Overseas Decoration Building, #122 Zhenhua RD., Futian, Shenzhen, China

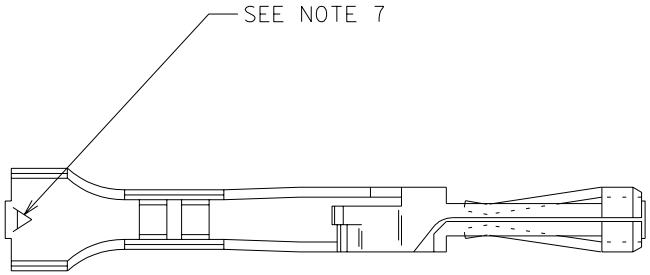

NOTES:

1. TERMINAL TO BE USED IN HOUSINGS 70066-**** AND 70450-****
2. REFER TO PRODUCT SPECIFICATION PS-70058
3. REFER TO MOLEX OPERATIONS AND SERVICE MANUAL FOR CRIMP DETAILS
4. TERMINAL TO BE USED WITH (0.64)/.025 SQUARE PINS
5. TERMINAL TO BE USED WITH 24-30 AWG STRANDED WIRE WITH (1.52)/.060 MAX. DIA. INSULATION
6. TERMINALS SUPPLIED IN REEL FORM
7. CRIMP SIZE INDICATOR A=24-30 AWG

*THE PRIMARY SHIPPING CARTON WILL BE LABELED "COMPLIANT TO RoHS DIRECTIVE 2002/95/EC AND ELV ANNEX II OF DIRECTIVE 2000/53/EC". CARTONS WITHOUT THIS LABEL MAY CONTAIN PRODUCT WITH LEAD.

PLATING:

.000050 MIN. GOLD PLATE IN SELECT AREA,
.000075 MIN. TIN PLATE IN SELECT AREA,
OVER NICKEL PLATE OVERALL.

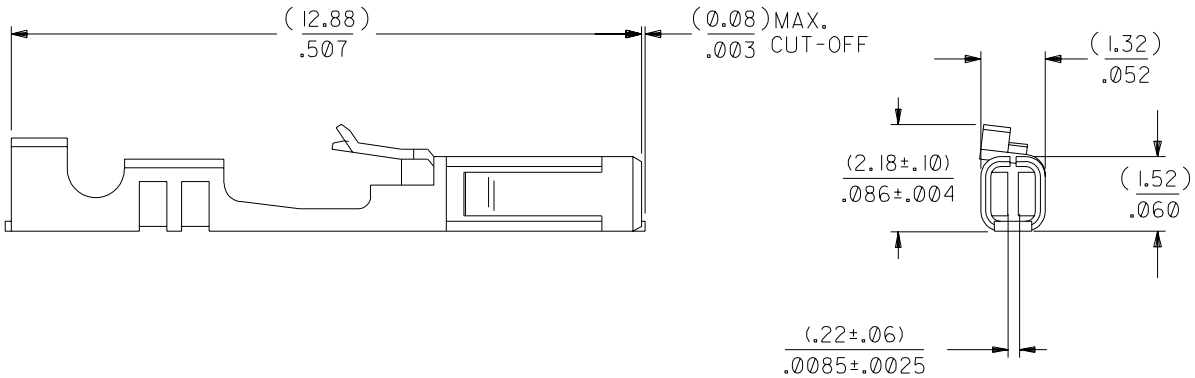

LTR.	REVISIONS	LTR.	REVISIONS
		A1	REVISED ECR #U80270 MCGRATH 97/07/31
B	LEAD FREE UCP2004-1769 RWHITE 04/03/11	A	RELEASED PER ECR # U50463 11/16/94 REED
A2	ADD. CRP SIZE&NOTE 7 ECN UDT1998-0183 MQWANG 04/17/98	2	REDRAWN & REVISED PER ERO #26031 03/02/88 MJM/JAS

DIMENSIONS SHOWN (METRIC) INCH
UNLESS OTHERWISE SPECIFIED TOLERANCES: ANGULAR ± 1/2°

	INCH	METRIC
3 PLACE	± .005	---
2 PLACE	± .01	± 0.13
1 PLACE	---	± 0.25

DRAFT WHERE APPLICABLE MUST REMAIN WITHIN DIMENSIONS

DRWG. BY JAS | CHK'D. BY | APP'D. BY | SCALE 10:1

C = 0 ▼ = 0 REVISE ONLY ON CAD SYSTEM

TITLE: TERMINAL - BOX/CRIMP

MOLEX INCORPORATED LISLE, ILL. 60532 U.S.A.

SHEET NO. 1 OF 1 | DATE 03/02/88

PART NO. 016-02-0139 | DRWG. NO. SD-70058-0040

FILE NAME S70058A15

THIS DRAWING CONTAINS INFORMATION THAT IS PROPRIETARY TO MOLEX INC. AND SHOULD NOT BE USED WITHOUT WRITTEN PERMISSION.

DIV. DA | SIZE B