Chipsmall Limited consists of a professional team with an average of over 10 year of expertise in the distribution of electronic components. Based in Hongkong, we have already established firm and mutual-benefit business relationships with customers from,Europe,America and south Asia,supplying obsolete and hard-to-find components to meet their specific needs.

With the principle of “Quality Parts,Customers Priority,Honest Operation,and Considerate Service”,our business mainly focus on the distribution of electronic components. Line cards we deal with include Microchip,ALPS,ROHM,Xilinx,Pulse,ON,Everlight and Freescale. Main products comprise IC,Modules,Potentiometer,IC Socket,Relay,Connector.Our parts cover such applications as commercial,industrial, and automotives areas.

We are looking forward to setting up business relationship with you and hope to provide you with the best service and solution. Let us make a better world for our industry!

Contact us

Tel: +86-755-8981 8866 Fax: +86-755-8427 6832
Email & Skype: info@chipsmall.com Web: www.chipsmall.com
Address: A1208, Overseas Decoration Building, #122 Zhenhua RD., Futian, Shenzhen, China

PART NO.	ENG. NO.
18-12-2602	1900-1(P901)L
18-12-2601	1900-1(P901)

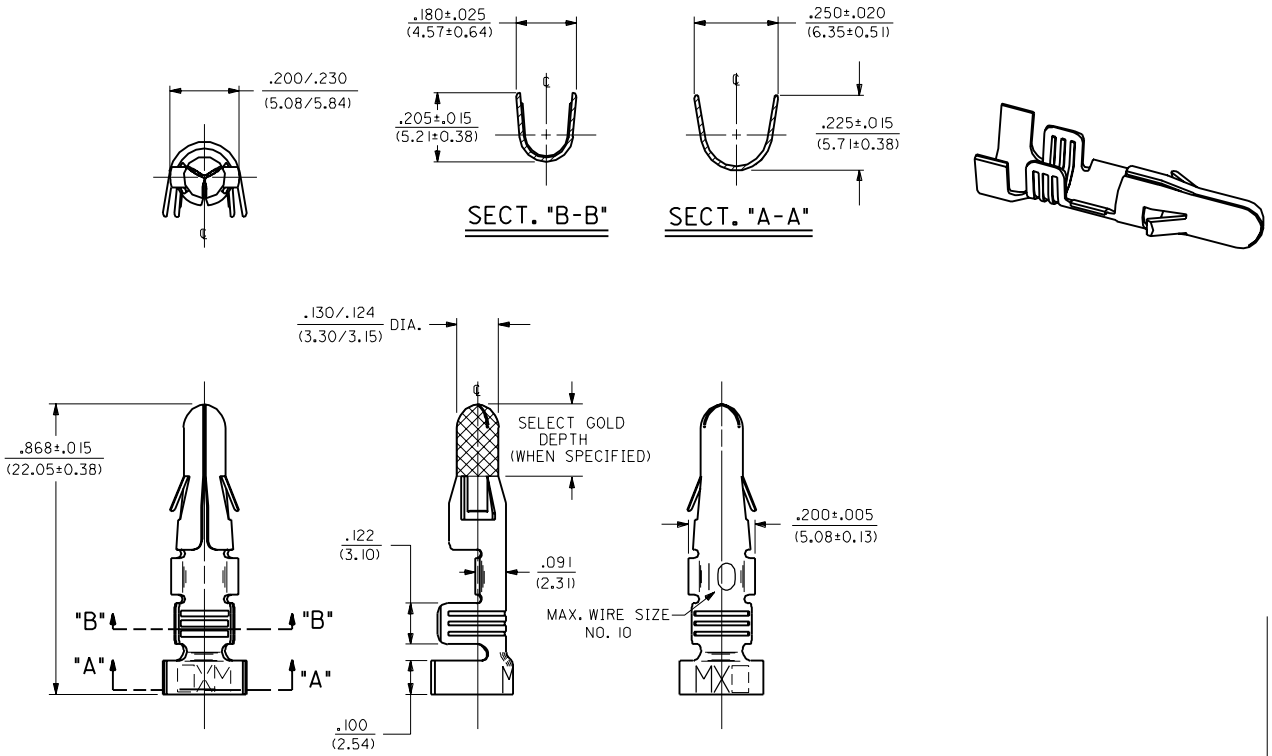

NOTES:

1. TERMINAL FOR USE WITH .125/(3.17) SERIES HOUSINGS AND WILL ACCEPT 10 THRU 14 AWG WIRE HAVING A .180/(4.57) MAX. DIAMETER INSULATION.
2. INSERTION FORCE: 6.0 LBS. MAX. WHEN TERMINAL IS INSERTED INTO .125/(3.17) DIA. CORE HOLE.
3. PULL OUT FORCE: 30 LBS. MIN. RETENTION IN HOUSING.

FINISH CODES:

901 HOT TIN DIP .000020/(0.00051) MIN.

MATERIAL NOTES:

1. CARTRIDGE BRASS, ALLOY #C26000; .013/(0.33) THICK, SPRING TEMPER

LEGEND

1900-1(****)*

VERSION — .180/(4.57) MAX. DIA. INSULATION

FORM — L=LOOSE

P=PREPLATE
BLANK=POSTPLATE

FINISH CODE
BLANK=CHAIN

LTR.	REVISIONS
D2	ADDED ISO VIEW UCR 1998-0248 WANG 98-05-20
D1	OBS. -1(555) & -1(555)L ECR U6 0379 GK 9/21/95 RW
D	ADD SELECT AREA ECR #U0 0230 3-5-90 RW
C	ADD "NO P.S." PER ECR U9 1189 11-27-89 TRM
B	REV. & REDRAWN ECR U8 1602 GEP 6-6-88 RW

MFG. SH. REV.

DIMENSIONS SHOWN (METRIC) INCH

UNLESS OTHERWISE SPECIFIED TOLERANCES: ANGULAR ± 0°30'

	INCH	METRIC
3 PLACE	± .010	---
2 PLACE	± .014	± 0.25
1 PLACE	---	± 0.35

DRAFT WHERE APPLICABLE MUST REMAIN WITHIN DIMENSIONS

DRWG. BY GEP
CHK'D. BY RW
APP'D. BY RAS
SCALE 4 : 1

▽ = 0 ▼ = 0 REVISE ONLY ON CAD SYSTEM

TITLE
CRIMP TERMINAL, MALE,
.125/(3.17) DIA 10-14 AWG
.180/(4.57) DIA. INSUL.

MOLEX INCORPORATED
LISLE, ILL. 60532 U.S.A.

SHEET NO. 1 OF 1
DATE 6/30/88

PART NO. SEE CHART
DRWG. NO. SD-1900-1■

FILE NAME S1900X1 DGN

THIS DRAWING CONTAINS INFORMATION THAT IS PROPRIETARY TO MOLEX INC. AND SHOULD NOT BE USED WITHOUT WRITTEN PERMISSION.

DIV. CP
SIZE C

NO P.S.