Chipsmall Limited consists of a professional team with an average of over 10 year of expertise in the distribution of electronic components. Based in Hongkong, we have already established firm and mutual-benefit business relationships with customers from,Europe,America and south Asia,supplying obsolete and hard-to-find components to meet their specific needs.

With the principle of “Quality Parts,Customers Priority,Honest Operation,and Considerate Service”,our business mainly focus on the distribution of electronic components. Line cards we deal with include Microchip,ALPS,ROHM,Xilinx,Pulse,ON,Everlight and Freescale. Main products comprise IC,Modules,Potentiometer,IC Socket,Relay,Connector.Our parts cover such applications as commercial,industrial, and automotives areas.

We are looking forward to setting up business relationship with you and hope to provide you with the best service and solution. Let us make a better world for our industry!

Contact us

Tel: +86-755-8981 8866 Fax: +86-755-8427 6832
Email & Skype: info@chipsmall.com Web: www.chipsmall.com
Address: A1208, Overseas Decoration Building, #122 Zhenhua RD., Futian, Shenzhen, China

CKTS	DIM A	DIM B
2	.200/5.08	.100/2.54
3	.300/7.62	.200/5.08
4	.400/10.16	.300/7.62
5	.500/12.70	.400/10.16
6	.600/15.24	.500/12.70
7	.700/17.78	.600/15.24
8	.800/20.32	.700/17.78
9	.900/22.86	.800/20.32
10	1.000/25.40	.900/22.86
11	1.100/27.94	1.000/25.40
12	1.200/30.48	1.100/27.94
13	1.300/33.02	1.200/30.48
14	1.400/35.56	1.300/33.02
15	1.500/38.10	1.400/35.56
16	1.600/40.64	1.500/38.10
17	1.700/43.18	1.600/40.64
18	1.800/45.72	1.700/43.18
19	1.900/48.26	1.800/45.72
20	2.000/50.80	1.900/48.26
21	2.100/53.34	2.000/50.80
22	2.200/55.88	2.100/53.34
23	2.300/58.42	2.200/55.88
24	2.400/60.96	2.300/58.42
25	2.500/63.50	2.400/60.96
26	2.600/66.04	2.500/63.50
27	2.700/68.58	2.600/66.04
28	2.800/71.12	2.700/68.58
29	2.900/73.66	2.800/71.12
30	3.000/76.20	2.900/73.66
31	3.100/78.74	3.000/76.20
32	3.200/81.28	3.100/78.74
33	3.300/83.82	3.200/81.28
34	3.400/86.36	3.300/83.82
35	3.500/88.90	3.400/86.36
36	3.600/91.44	3.500/88.90

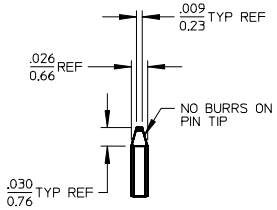

DETAIL X
SCALE 5:1
SEE NOTE 11

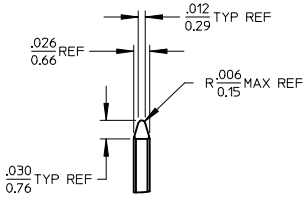

DETAIL Y
SCALE 5:1
SEE NOTE 11

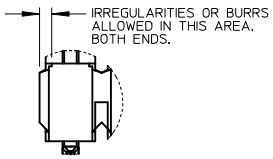

DETAIL Z
SCALE 5:1

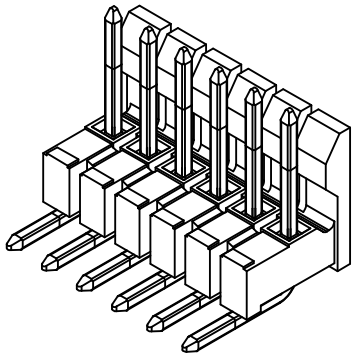

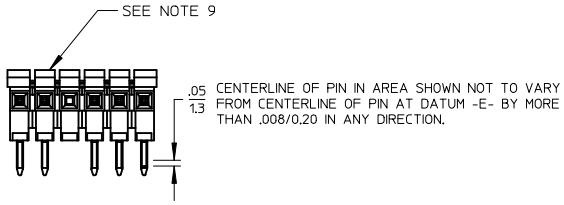

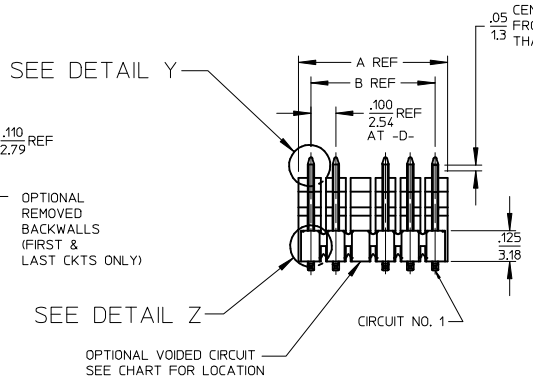

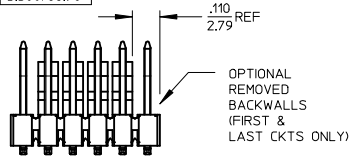

REMOVED BACKWALLS OPTION
SEE NOTE 12

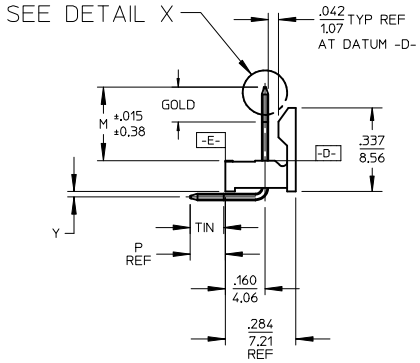

NOTES:
1. MATERIAL: GLASS FILLED NYLON, 94V-0, COLOR: BLACK
2. FINISH:
   (154) OVERALL TIN: .000100/0.00254 MIN.
   OVER .000050/0.00127 MIN NICKEL.
   (208) SELECT GOLD: .000015/0.00038 MIN.
   SELECT TIN: .000100/0.00254 MIN.
   OVERALL NICKEL UNDERPLATE: .000050/0.00127 MIN.
   (228) SELECT GOLD: .000030/0.00076 MIN.
   SELECT TIN: .000100/0.00254 MIN.
   OVERALL NICKEL UNDERPLATE: .000050/0.00127 MIN.
3. PRODUCT SPECIFICATION: PS-10-07.
4. PACKAGING INFORMATION: SEE TABLES
5. KINK PIN OPTION NOT RECOMMENDED FOR 2 CIRCUIT PARTS. HOLE SIZE MAY NEED TO BE ADJUSTED ON 2 CIRCUIT PARTS WITH KINK OPTION FOR PROPER INSERTION ON THE PCB. SEE SMES-42003 OR SMES-43703-0000 FOR ADDITIONAL INFORMATION ON KINK PIN DIRECTION AND PLACEMENT.
6. HEADERS ARE NOT STACKABLE ON .100/2.54 CENTERS.
7. SOLDERABILITY PER SMES-152.
8. PIN PUSH OUT FORCE: 3 LBS. MIN.
9. ABRASION MARKS ON BACK WALL SURFACE ARE PERMISSIBLE.
10. PARTS CONFORM TO CLASS 'B' REQUIREMENTS OF COSMETIC SPECIFICATION PS-45499-002.
11. PIN TIP DIMENSIONS ARE SHOWN FOR REFERENCE ONLY. DIMENSIONS APPLY PRIOR TO PLATING OR ASSEMBLY.
12. FIRST AND LAST CIRCUIT BACKWALLS MUST BE REMOVED WHEN MATING TO A PART WITH POLARIZING RIBS.

2-*	L5
1	L6
SHT	REV

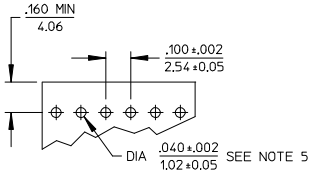

RECOMMENDED PC BOARD LAYOUT

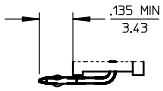

KINKED PIN OPTION
SEE NOTE 5

REV	DESCRIPTION
L6	ADD NOTE 12 EC NO: UCP2014-1471 DRWN:MKIPPER 2013/10/01 CHKD:BANDERSON 2013/10/01 APPR:FSMITH 2013/10/09

QUALITY SYMBOLS
F_A=0
F_C=0
F_P=0

GENERAL TOLERANCES (UNLESS SPECIFIED)

	mm	INCH
4 PLACES	± ---	± ---
3 PLACES	± ---	± .010
2 PLACES	± 0.25	± .014
1 PLACE	± 0.36	± ---
0 PLACE	±	±

ANGULAR ±1/2°
DRAFT WHERE APPLICABLE MUST REMAIN WITHIN DIMENSIONS

DIMENSION STYLE	SCALE	DESIGN UNITS	
IN/MM	2:1	INCH	THIRD ANGLE PROJECTION

DRAWN BY JSCHAFER	DATE 2004/03/18	TITLE .100 FRICTION LOCK BREAKAWAY HEADER ASSY
CHECKED BY KSAMIEC	DATE 2004/03/18	
APPROVED BY MARGULIS	DATE 2004/03/18	molex
MATERIAL NO. SEE CHART		DOCUMENT NO. SD-42228-002
SIZE B		SHEET NO. 1 OF 6

THIS DRAWING CONTAINS INFORMATION THAT IS PROPRIETARY TO MOLEX INCORPORATED AND SHOULD NOT BE USED WITHOUT WRITTEN PERMISSION

A-42228-0213/0246	
HEADER NUMBER:	41411
PLATING:	154
PIN LENGTH: L	.705/17.91
MATING LENGTH: M	.295/7.49
GOLD POINT: G	N/A
PC TAIL LENGTH: P	.120/3.05
TIN: T	OVERALL
DIMENSION Y	.022/0.56
CKTS:	3-36
KINKS:	NO
REMOVED BACKWALLS:	YES
VOIDED CKTS:	NONE
PACKAGING:	BULK, PER PK-40873-0056

CKTS	MATERIAL NUMBER	ENG NUMBER	CKTS	MATERIAL NUMBER	ENG NUMBER
02			20	22-28-1206	A-42228-0230
03	22-28-1036	A-42228-0213	21	22-28-1216	A-42228-0231
04	22-28-1046	A-42228-0214	22	22-28-1226	A-42228-0232
05	22-28-1056	A-42228-0215	23	22-28-1236	A-42228-0233
06	22-28-1066	A-42228-0216	24	22-28-1246	A-42228-0234
07	22-28-1076	A-42228-0217	25	22-28-1256	A-42228-0235
08	22-28-1086	A-42228-0218	26	22-28-1266	A-42228-0236
09	22-28-1096	A-42228-0219	27	22-28-1276	A-42228-0237
10	22-28-1106	A-42228-0220	28	22-28-1286	A-42228-0238
11	22-28-1116	A-42228-0221	29	22-28-1296	A-42228-0239
12	22-28-1126	A-42228-0222	30	22-28-1306	A-42228-0240
13	22-28-1136	A-42228-0223	31	22-28-1316	A-42228-0241
14	22-28-1146	A-42228-0224	32	22-28-1326	A-42228-0242
15	22-28-1156	A-42228-0225	33	22-28-1336	A-42228-0243
16	22-28-1166	A-42228-0226	34	22-28-1346	A-42228-0244
17	22-28-1176	A-42228-0227	35	22-28-1356	A-42228-0245
18	22-28-1186	A-42228-0228	36	22-28-1366	A-42228-0246
19	22-28-1196	A-42228-0229			

A-42228-0248/0281	
HEADER NUMBER:	41411
PLATING:	208
PIN LENGTH: L	.705/17.91
MATING LENGTH: M	.295/7.49
GOLD POINT: G	.140/3.56
PC TAIL LENGTH: P	.120/3.05
TIN: T	.135/3.43
DIMENSION Y	.022/0.56
CKTS:	3-36
KINKS:	NO
REMOVED BACKWALLS:	YES
VOIDED CKTS:	NONE
PACKAGING:	BULK, PER PK-40873-0056

CKTS	MATERIAL NUMBER	ENG NUMBER	CKTS	MATERIAL NUMBER	ENG NUMBER
02			20	22-28-1207	A-42228-0265
03	22-28-1037	A-42228-0248	21	22-28-1217	A-42228-0266
04	22-28-1047	A-42228-0249	22	22-28-1227	A-42228-0267
05	22-28-1057	A-42228-0250	23	22-28-1237	A-42228-0268
06	22-28-1067	A-42228-0251	24	22-28-1247	A-42228-0269
07	22-28-1077	A-42228-0252	25	22-28-1257	A-42228-0270
08	22-28-1087	A-42228-0253	26	22-28-1267	A-42228-0271
09	22-28-1097	A-42228-0254	27	22-28-1277	A-42228-0272
10	22-28-1107	A-42228-0255	28	22-28-1287	A-42228-0273
11	22-28-1117	A-42228-0256	29	22-28-1297	A-42228-0274
12	22-28-1127	A-42228-0257	30	22-28-1307	A-42228-0275
13	22-28-1137	A-42228-0258	31	22-28-1317	A-42228-0276
14	22-28-1147	A-42228-0259	32	22-28-1327	A-42228-0277
15	22-28-1157	A-42228-0260	33	22-28-1337	A-42228-0278
16	22-28-1167	A-42228-0261	34	22-28-1347	A-42228-0279
17	22-28-1177	A-42228-0262	35	22-28-1357	A-42228-0280
18	22-28-1187	A-42228-0263	36	22-28-1367	A-42228-0281
19	22-28-1197	A-42228-0264			

REV:	ECR/ECN INFORMATION	TITLE:	SHEET No.
L5	EC No. **UCP2012-3374** DATE **10/12/2012**	.100 FRICTION LOCK BREAKAWAY HEADER ASSY.	**- 2 -**

DOCUMENT NUMBER:	CREATED / REVISED BY:	CHECKED BY:	APPROVED BY:
SD- 42228 -002	**MKIPPER**	**JBELL**	**FSMITH-ROEMER**

A-42228-0283/0316	
HEADER NUMBER:	41411
PLATING:	228
PIN LENGTH: L	.705/17.91
MATING LENGTH: M	.295/7.49
GOLD POINT: G	.140/3.56
PC TAIL LENGTH: P	.120/3.05
TIN: T	.135/3.43
DIMENSION Y	.022/0.56
CKTS:	3-36
KINKS:	NO
REMOVED BACKWALLS:	YES
VOIDED CKTS:	NONE
PACKAGING:	BULK, PER PK-40873-0056

CKTS	MATERIAL NUMBER	ENG NUMBER	CKTS	MATERIAL NUMBER	ENG NUMBER
02			20	22-28-1208	A-42228-0300
03	22-28-1038	A-42228-0283	21	22-28-1218	A-42228-0301
04	22-28-1048	A-42228-0284	22	22-28-1228	A-42228-0302
05	22-28-1058	A-42228-0285	23	22-28-1238	A-42228-0303
06	22-28-1068	A-42228-0286	24	22-28-1248	A-42228-0304
07	22-28-1078	A-42228-0287	25	22-28-1258	A-42228-0305
08	22-28-1088	A-42228-0288	26	22-28-1268	A-42228-0306
09	22-28-1098	A-42228-0289	27	22-28-1278	A-42228-0307
10	22-28-1108	A-42228-0290	28	22-28-1288	A-42228-0308
11	22-28-1118	A-42228-0291	29	22-28-1298	A-42228-0309
12	22-28-1128	A-42228-0292	30	22-28-1308	A-42228-0310
13	22-28-1138	A-42228-0293	31	22-28-1318	A-42228-0311
14	22-28-1148	A-42228-0294	32	22-28-1328	A-42228-0312
15	22-28-1158	A-42228-0295	33	22-28-1338	A-42228-0313
16	22-28-1168	A-42228-0296	34	22-28-1348	A-42228-0314
17	22-28-1178	A-42228-0297	35	22-28-1358	A-42228-0315
18	22-28-1188	A-42228-0298	36	22-28-1368	A-42228-0316
19	22-28-1198	A-42228-0299			

A-42228-0318/0351	
HEADER NUMBER:	41411
PLATING:	154
PIN LENGTH: L	.720/18.29
MATING LENGTH: M	.295/7.49
GOLD POINT: G	N/A
PC TAIL LENGTH: P	.135/3.43
TIN: T	OVERALL
DIMENSION Y	.022/0.56
CKTS:	3-36
KINKS:	YES SMES-42003
REMOVED BACKWALLS:	YES
VOIDED CKTS:	NONE
PACKAGING:	BULK, PER PK-40873-0056

CKTS	MATERIAL NUMBER	ENG NUMBER	CKTS	MATERIAL NUMBER	ENG NUMBER
02			20	22-28-1209	A-42228-0335
03	22-28-1039	A-42228-0318	21	22-28-1219	A-42228-0336
04	22-28-1049	A-42228-0319	22	22-28-1229	A-42228-0337
05	22-28-1059	A-42228-0320	23	22-28-1239	A-42228-0338
06	22-28-1069	A-42228-0321	24	22-28-1249	A-42228-0339
07	22-28-1079	A-42228-0322	25	22-28-1259	A-42228-0340
08	22-28-1089	A-42228-0323	26	22-28-1269	A-42228-0341
09	22-28-1099	A-42228-0324	27	22-28-1279	A-42228-0342
10	22-28-1109	A-42228-0325	28	22-28-1289	A-42228-0343
11	22-28-1119	A-42228-0326	29	22-28-1299	A-42228-0344
12	22-28-1129	A-42228-0327	30	22-28-1309	A-42228-0345
13	22-28-1139	A-42228-0328	31	22-28-1319	A-42228-0346
14	22-28-1149	A-42228-0329	32	22-28-1329	A-42228-0347
15	22-28-1159	A-42228-0330	33	22-28-1339	A-42228-0348
16	22-28-1169	A-42228-0331	34	22-28-1349	A-42228-0349
17	22-28-1179	A-42228-0332	35	22-28-1359	A-42228-0350
18	22-28-1189	A-42228-0333	36	22-28-1369	A-42228-0351
19	22-28-1199	A-42228-0334			

REV:	ECR/ECN INFORMATION	TITLE:	SHEET No.
L5	EC No. **UCP2012-3374** DATE **10/12/2012**	.100 FRICTION LOCK BREAKAWAY HEADER ASSY.	**- 3 -**

DOCUMENT NUMBER:	CREATED / REVISED BY:	CHECKED BY:	APPROVED BY:
SD- 42228 -002	**MKIPPER**	**JBELL**	**FSMITH-ROEMER**

TEMPLATE FILENAME: PRODUCT_SPEC[SIZE_A](V.1).DOC

A-42228-0422/0454	
HEADER NUMBER:	41411
PLATING:	228
PIN LENGTH: L	.705/17.91
MATING LENGTH: M	.295/7.49
GOLD POINT: G	.140/3.56
PC TAIL LENGTH: P	.120/3.05
TIN: T	.135/3.43
DIMENSION Y	.022/0.56
CKTS:	3-36
KINKS:	NO
REMOVED BACKWALLS:	YES
VOIDED CKTS:	3
PACKAGING:	BULK, PER PK-40873-0056

CKTS	MATERIAL NUMBER	ENG NUMBER	CKTS	MATERIAL NUMBER	ENG NUMBER
02			20		A-42228-0439
03		A-42228-0422	21		A-42228-0440
04	22-29-1041	A-42228-0423	22		A-42228-0441
05		A-42228-0424	23		A-42228-0442
06		A-42228-0425	24		A-42228-0443
07		A-42228-0426	25		A-42228-0444
08		A-42228-0427	26		A-42228-0445
09		A-42228-0428	27		A-42228-0446
10		A-42228-0429	28		A-42228-0447
11		A-42228-0430	29		A-42228-0448
12		A-42228-0431	30		A-42228-0449
13		A-42228-0432	31		A-42228-0450
14		A-42228-0433	32		A-42228-0451
15		A-42228-0434	33		A-42228-0452
16		A-42228-0435	34		A-42228-0453
17		A-42228-0436	35		A-42228-0454
18		A-42228-0437	36		A-42228-0455
19		A-42228-0438			

A-42228-0456/0490	
HEADER NUMBER:	41411
PLATING:	208
PIN LENGTH: L	.720/18.29
MATING LENGTH: M	.295/7.49
GOLD POINT: G	.140/3.56
PC TAIL LENGTH: P	.135/3.43
TIN: T	.135/3.43
DIMENSION Y	.022/0.56
CKTS:	2-36
KINKS:	YES SMES-42003
REMOVED BACKWALLS:	NO
VOIDED CKTS:	2
PACKAGING:	BULK, PER PK-40873-0056

CKTS	MATERIAL NUMBER	ENG NUMBER	CKTS	MATERIAL NUMBER	ENG NUMBER
02		A-42228-0456	20	22-29-1204	A-42228-0474
03	22-29-1034	A-42228-0457	21	22-29-1214	A-42228-0475
04	22-29-1044	A-42228-0458	22	22-29-1224	A-42228-0476
05	22-29-1054	A-42228-0459	23	22-29-2234	A-42228-0477
06	22-29-1064	A-42228-0460	24	22-29-1244	A-42228-0478
07	22-29-1074	A-42228-0461	25	22-29-1254	A-42228-0479
08	22-29-1084	A-42228-0462	26	22-29-1264	A-42228-0480
09	22-29-1094	A-42228-0463	27	22-29-1274	A-42228-0481
10	22-29-1104	A-42228-0464	28	22-29-1284	A-42228-0482
11	22-29-1114	A-42228-0465	29	22-29-1294	A-42228-0483
12	22-29-1124	A-42228-0466	30	22-29-1304	A-42228-0484
13	22-29-1134	A-42228-0467	31	22-29-1314	A-42228-0485
14	22-29-1144	A-42228-0468	32	22-29-1324	A-42228-0486
15	22-29-1154	A-42228-0469	33	22-29-1334	A-42228-0487
16	22-29-1164	A-42228-0470	34	22-29-1344	A-42228-0488
17	22-29-1174	A-42228-0471	35	22-29-1354	A-42228-0489
18	22-29-1184	A-42228-0472	36	22-29-1364	A-42228-0490
19	22-29-1194	A-42228-0473			

REV:	ECR/ECN INFORMATION	TITLE:	SHEET No.
L5	EC No. **UCP2012-3374** DATE **10/12/2012**	.100 FRICTION LOCK BREAKAWAY HEADER ASSY.	**- 4 -**

DOCUMENT NUMBER:	CREATED / REVISED BY:	CHECKED BY:	APPROVED BY:
SD- 42228 -002	**MKIPPER**	**JBELL**	**FSMITH-ROEMER**

A-42228-0491/0524	
HEADER NUMBER:	41411
PLATING:	154
PIN LENGTH: L	.720/18.29
MATING LENGTH: M	.295/7.49
GOLD POINT: G	N/A
PC TAIL LENGTH: P	.135/3.43
TIN: T	OVERALL
DIMENSION Y	.022/0.56
CKTS:	3-36
KINKS:	YES SMES-43703-0000
REMOVED BACKWALLS:	YES
VOIDED CKTS:	NONE
PACKAGING:	BULK, PER PK-40873-0056

CKTS	MATERIAL NUMBER	ENG NUMBER	CKTS	MATERIAL NUMBER	ENG NUMBER
02			20		A-42228-0508
03		A-42228-0491	21		A-42228-0509
04		A-42228-0492	22		A-42228-0510
05	42228-0493	A-42228-0493	23		A-42228-0511
06	42228-0494	A-42228-0494	24		A-42228-0512
07	42228-0495	A-42228-0495	25		A-42228-0513
08		A-42228-0496	26		A-42228-0514
09		A-42228-0497	27		A-42228-0515
10		A-42228-0498	28		A-42228-0516
11	42228-0499	A-42228-0499	29		A-42228-0517
12		A-42228-0500	30		A-42228-0518
13		A-42228-0501	31		A-42228-0519
14		A-42228-0502	32		A-42228-0520
15		A-42228-0503	33		A-42228-0521
16		A-42228-0504	34		A-42228-0522
17		A-42228-0505	35		A-42228-0523
18		A-42228-0506	36		A-42228-0524
19		A-42228-0507			

A-42228-0525/0537	
HEADER NUMBER:	41411
PLATING:	154
PIN LENGTH: L	.720/18.29
MATING LENGTH: M	.295/7.49
GOLD POINT: G	N/A
PC TAIL LENGTH: P	.135/3.43
TIN: T	OVERALL
DIMENSION Y	.022/0.56
CKTS:	24-36
KINKS:	YES SMES-42003
REMOVED BACKWALLS:	NO
VOIDED CKTS:	5, 7, 11,13,16, 20, 24
PACKAGING:	BULK, PER PK-40873-0056

CKTS	MATERIAL NUMBER	ENG NUMBER	CKTS	MATERIAL NUMBER	ENG NUMBER
02			20		
03			21		
04			22		
05			23		
06			24	42228-0525	A-42228-0525
07			25	42228-0526	A-42228-0526
08			26	42228-0527	A-42228-0527
09			27	42228-0528	A-42228-0528
10			28	42228-0529	A-42228-0529
11			29	42228-0530	A-42228-0530
12			30	42228-0531	A-42228-0531
13			31	42228-0532	A-42228-0532
14			32	42228-0533	A-42228-0533
15			33	42228-0534	A-42228-0534
16			34	42228-0535	A-42228-0535
17			35	42228-0536	A-42228-0536
18			36	42228-0537	A-42228-0537
19					

REV:	ECR/ECN INFORMATION	TITLE:	SHEET No.
L5	EC No. **UCP2012-3374** DATE **10/12/2012**	.100 FRICTION LOCK BREAKAWAY HEADER ASSY.	**- 5 -**

DOCUMENT NUMBER:	CREATED / REVISED BY:	CHECKED BY:	APPROVED BY:
SD- 42228 -002	**MKIPPER**	**JBELL**	**FSMITH-ROEMER**

A-42228-0538/0566	
HEADER NUMBER:	41411
PLATING:	154
PIN LENGTH: L	.720/18.29
MATING LENGTH: M	.295/7.49
GOLD POINT: G	N/A
PC TAIL LENGTH: P	.135/3.43
TIN: T	OVERALL
DIMENSION Y	.022/0.56
CKTS:	8-36
KINKS:	YES SMES-42003
REMOVED BACKWALLS:	NO
VOIDED CKTS:	8
PACKAGING:	BULK, PER PK-40873-0056

CKTS	MATERIAL NUMBER	ENG NUMBER	CKTS	MATERIAL NUMBER	ENG NUMBER
02			20	42228-0550	A-42228-0550
03			21	42228-0551	A-42228-0551
04			22	42228-0552	A-42228-0552
05			23	42228-0553	A-42228-0553
06			24	42228-0554	A-42228-0554
07			25	42228-0555	A-42228-0555
08	42228-0538	A-42228-0538	26	42228-0556	A-42228-0556
09	42228-0539	A-42228-0539	27	42228-0557	A-42228-0557
10	42228-0540	A-42228-0540	28	42228-0558	A-42228-0558
11	42228-0541	A-42228-0541	29	42228-0559	A-42228-0559
12	42228-0542	A-42228-0542	30	42228-0560	A-42228-0560
13	42228-0543	A-42228-0543	31	42228-0561	A-42228-0561
14	42228-0544	A-42228-0544	32	42228-0562	A-42228-0562
15	42228-0545	A-42228-0545	33	42228-0563	A-42228-0563
16	42228-0546	A-42228-0546	34	42228-0564	A-42228-0564
17	42228-0547	A-42228-0547	35	42228-0565	A-42228-0565
18	42228-0548	A-42228-0548	36	42228-0566	A-42228-0566
19	42228-0549	A-42228-0549			

REV:	ECR/ECN INFORMATION	TITLE:	SHEET No.
L5	EC No. **UCP2012-3374** DATE **10/12/2012**	.100 FRICTION LOCK BREAKAWAY HEADER ASSY.	**- 6 -**

DOCUMENT NUMBER:	CREATED / REVISED BY:	CHECKED BY:	APPROVED BY:
SD- 42228 -002	**MKIPPER**	**JBELL**	**FSMITH-ROEMER**