Chipsmall Limited consists of a professional team with an average of over 10 year of expertise in the distribution of electronic components. Based in Hongkong, we have already established firm and mutual-benefit business relationships with customers from,Europe,America and south Asia,supplying obsolete and hard-to-find components to meet their specific needs.

With the principle of “Quality Parts,Customers Priority,Honest Operation,and Considerate Service”,our business mainly focus on the distribution of electronic components. Line cards we deal with include Microchip,ALPS,ROHM,Xilinx,Pulse,ON,Everlight and Freescale. Main products comprise IC,Modules,Potentiometer,IC Socket,Relay,Connector.Our parts cover such applications as commercial,industrial, and automotives areas.

We are looking forward to setting up business relationship with you and hope to provide you with the best service and solution. Let us make a better world for our industry!

Contact us

Tel: +86-755-8981 8866 Fax: +86-755-8427 6832
Email & Skype: info@chipsmall.com Web: www.chipsmall.com
Address: A1208, Overseas Decoration Building, #122 Zhenhua RD., Futian, Shenzhen, China

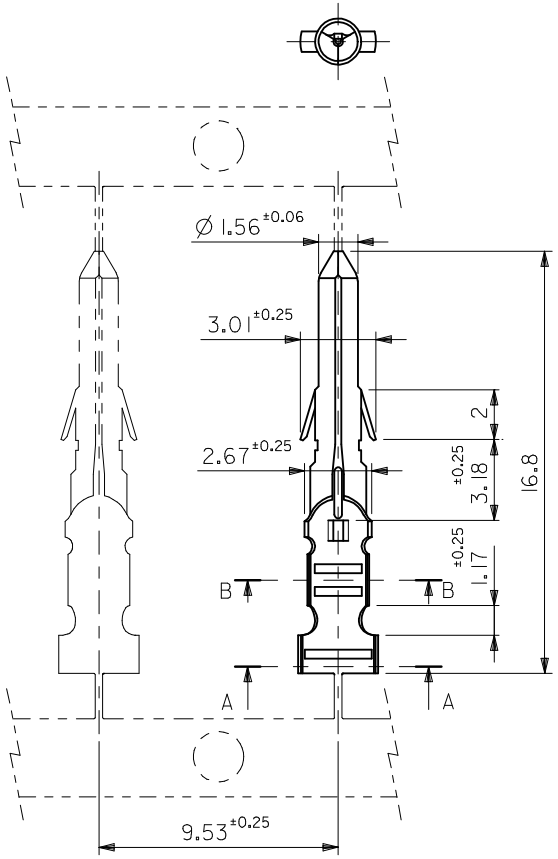

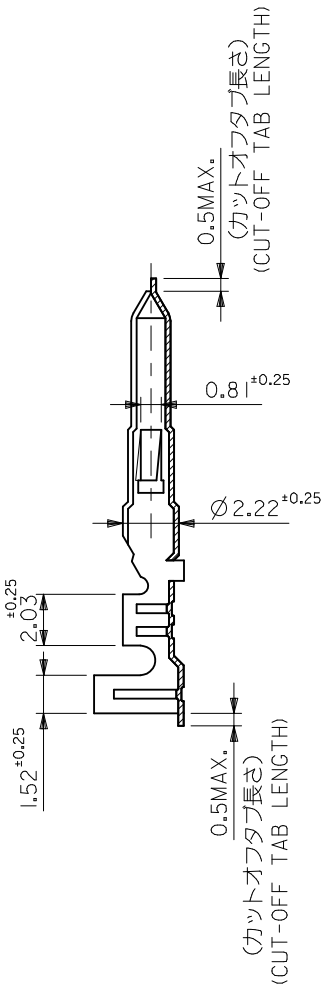

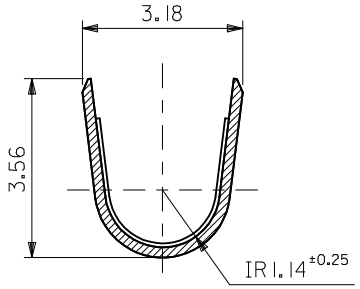

SECT. A-A
(SCALE 10 : 1)

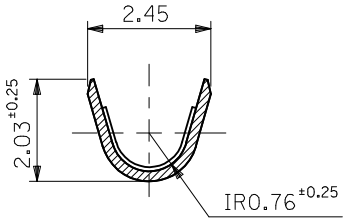

SECT. B-B
(SCALE 10 : 1)

銅(0.5 μm MIN.)下地 錫(0.9 μm MIN.) TIN(0.9 μm MIN.) OVER COPPER(0.5 μm MIN.)	39-00-0327	1560TL	バラ端子 LOOSE
	39-00-0278	1560T	連鎖状端子 CHAIN
メッキ PLATING	EDP.NO.	ENG.NO.	形状 FORM

MODEL NO. 1560*

注記 NOTES:

1. 一般公差：±0.4
   GENERAL TOLERANCES: ±0.4

材料 MATERIAL	黄銅 BRASS 0.2 t
仕上げ FINISH	〃
適用電線範囲 WIRE RANGE	AWG#18-#24
被覆外径 INS. RANGE	Ø1.5～3.1

REVISED
EC NO: J2009-1263
DRWN:NAKAMURAA 2008/12/16
CH'KD:T.HARUYAMA 2008/12/16
APPR:NUKITA 2009/01/15
DESCRIPTION
REV

GENERAL TOLERANCES (UNLESS SPECIFIED)

10 UNDER	±---
10 OVER 30 UNDER	±---
30 OVER	±---
ANGULAR	±--- °

DRAFT WHERE APPLICABLE MUST REMAIN WITHIN DIMENSIONS

DIMENSION STYLE MM ONLY	SCALE 5:1	DESIGN UNITS METRIC	THIRD ANGLE PROJECTION
DRAWN BY H.HASEGAWA DATE '93/7/9	TITLE 0.62 DIA CRIMP MALE TERM		
CHECKED BY H.HIRAMOTO DATE '93/7/9			
APPROVED BY M.FUKUSHIMA DATE '93/7/9	molex MOLEX INCORPORATED		
MATERIAL NO. SEE TABLE	DOCUMENT NO. SD-1560-001		SHEET NO. 1 OF 1
SIZE A3	THIS DRAWING CONTAINS INFORMATION THAT IS PROPRIETARY TO MOLEX INCORPORATED AND SHOULD NOT BE USED WITHOUT WRITTEN PERMISSION		

tb_frame_A3_J_ME_S
Rev. E 2006/04/15

EN-02JA(021)