Chipsmall Limited consists of a professional team with an average of over 10 year of expertise in the distribution of electronic components. Based in Hongkong, we have already established firm and mutual-benefit business relationships with customers from,Europe,America and south Asia,supplying obsolete and hard-to-find components to meet their specific needs.

With the principle of “Quality Parts,Customers Priority,Honest Operation,and Considerate Service”,our business mainly focus on the distribution of electronic components. Line cards we deal with include Microchip,ALPS,ROHM,Xilinx,Pulse,ON,Everlight and Freescale. Main products comprise IC,Modules,Potentiometer,IC Socket,Relay,Connector.Our parts cover such applications as commercial,industrial, and automotives areas.

We are looking forward to setting up business relationship with you and hope to provide you with the best service and solution. Let us make a better world for our industry!

Contact us

Tel: +86-755-8981 8866 Fax: +86-755-8427 6832
Email & Skype: info@chipsmall.com Web: www.chipsmall.com
Address: A1208, Overseas Decoration Building, #122 Zhenhua RD., Futian, Shenzhen, China

DWG. NO. SD-1381*

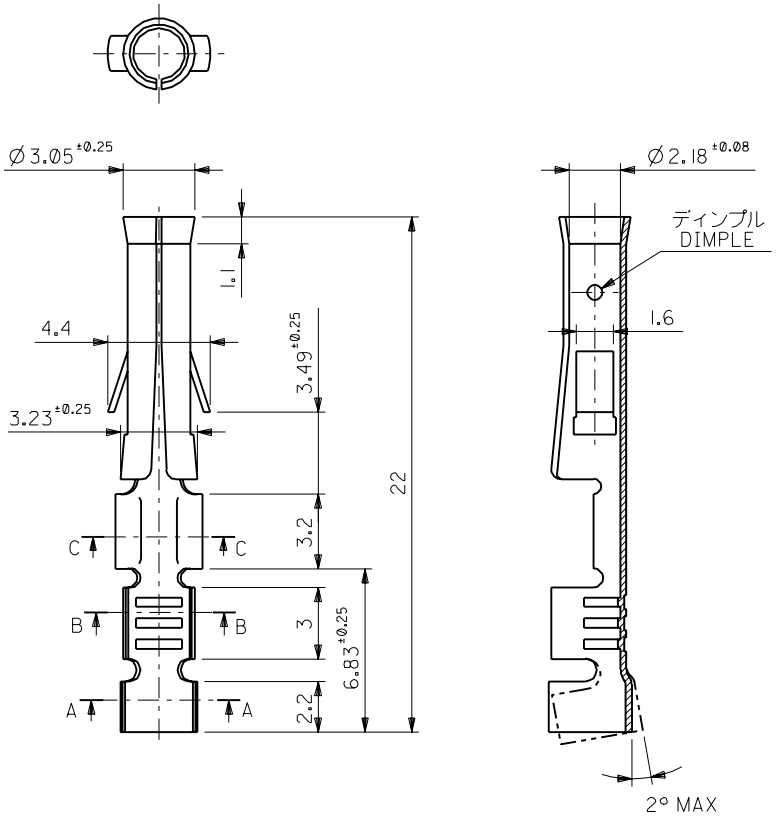

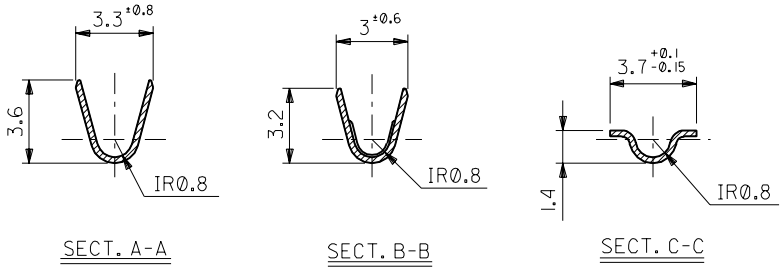

メッキ PLATING	ディンプル有無 WITH DIMPLE	EDP.NO.	ENG.NO.	形状 FORM
ニッケル (2 μm MIN.) 下地 金(0.35 μm MIN.) GOLD(0.35 μm MIN.) OVER NICKEL(2 μm MIN.)	無 NO	39-00-0314	1381AGL	バラ端子 LOOSE
		39-00-0312	1381AG	連鎖状端子 CHAIN
	有 YES	39-00-0313	1381GL	バラ端子 LOOSE
		39-00-0311	1381G	連鎖状端子 CHAIN
銅 (3 μm MIN.) 下地 錫 (0.5 μm MIN.) TIN(0.5 μm MIN.) OVER COPPER(3 μm MIN.)	無 NO	39-00-0310	1381AT2L	バラ端子 LOOSE
		39-00-0309	1381AT2	連鎖状端子 CHAIN
銅(0.5 μm MIN.)下地 錫 (0.9 μm MIN.) TIN(0.9 μm MIN.) OVER COPPER(0.5 μm MIN.)	無 NO	39-00-0308	1381ATL	バラ端子 LOOSE
		39-00-0284	1381AT	連鎖状端子 CHAIN
	有 YES	39-00-0307	1381TL	バラ端子 LOOSE
		39-00-0285	1381T	連鎖状端子 CHAIN

注記 NOTES:

1. 一般公差 : ±0.4
   GENERAL TOLERANCES: ±0.4

一般公差 GENERAL TOLERANCES	
角度 ANGLE	±3°
30 以上 OVER	±0.3
10 以上 OVER 30 未満 UNDER	±0.25
10 未満 UNDER	±0.2

記号 LTR	変更内容 REVISION RECORD	DR.	CHK.	日付 DATE
H	REDRAWN 再作図 (J30673)	h.n.	H.H	'93/07/06

材料 MATERIAL: 黄銅 BRASS 0.264t

仕上げ FINISH: ——〃——

適用電線範囲 WIRE RANGE: AWG# 18-#24

被覆外径 INS. RANGE: Ø 1.5～3.1

DRAWN BY '93/07/06 H.HASEGAWA

CHK'D BY '93/07/06 H.HIRAMOTO

APP'D BY '93/07/06 M.FUKUSHIMA

尺度 SCALE: 5 : 1

MOLEX-JAPAN CO.,LTD. 日本モレックス株式会社

REVISE ONLY ON CAD SYSTEM

TITLE 名称: .093 DIA. FEMALE TERM.

DWG. NO.: SD-1381*

REV: H

1381.S01

:MM DIMENSIONS IN METRIC DO NOT SCALE DRAWING

THIS DRAWING CONTAINS INFORMATION THAT IS PROPRIETARY TO MOLEX(JAPAN) AND SHOULD NOT BE USED WITHOUT WRITTEN PERMISSION
本図面は日本モレックス（株）の所有する情報を含むもので当社の許可なく複製を禁止する。

EN-0IC(032)MXJ-32