Chipsmall Limited consists of a professional team with an average of over 10 year of expertise in the distribution of electronic components. Based in Hongkong, we have already established firm and mutual-benefit business relationships with customers from,Europe,America and south Asia,supplying obsolete and hard-to-find components to meet their specific needs.

With the principle of “Quality Parts,Customers Priority,Honest Operation,and Considerate Service”,our business mainly focus on the distribution of electronic components. Line cards we deal with include Microchip,ALPS,ROHM,Xilinx,Pulse,ON,Everlight and Freescale. Main products comprise IC,Modules,Potentiometer,IC Socket,Relay,Connector.Our parts cover such applications as commercial,industrial, and automotives areas.

We are looking forward to setting up business relationship with you and hope to provide you with the best service and solution. Let us make a better world for our industry!

Contact us

Tel: +86-755-8981 8866 Fax: +86-755-8427 6832
Email & Skype: info@chipsmall.com Web: www.chipsmall.com
Address: A1208, Overseas Decoration Building, #122 Zhenhua RD., Futian, Shenzhen, China

MATERIAL NO.	ENG. NO.	STUD SIZE	"S"±.003	MATERIAL	PLATING
190840001	SRZ-0129-06	6	.146/3.71	BRASS	NONE
190840002	SRZ-0129-08	8	.173/4.39		
190840003	SRZ-0129-10	10	.198/5.03		
190840004	SRZ-4129-06	6	.146/3.71	BRASS	TIN
190840005	SRZ-4129-08	8	.173/4.39		
190840006	SRZ-4129-10	10	.198/5.03		
190840007	SRZ-S-4129-06	6	.146/3.71	STEEL	
190840008	SRZ-S-4129-08	8	.173/4.39		
190840009	SRZ-S-4129-10	10	.198/5.03		

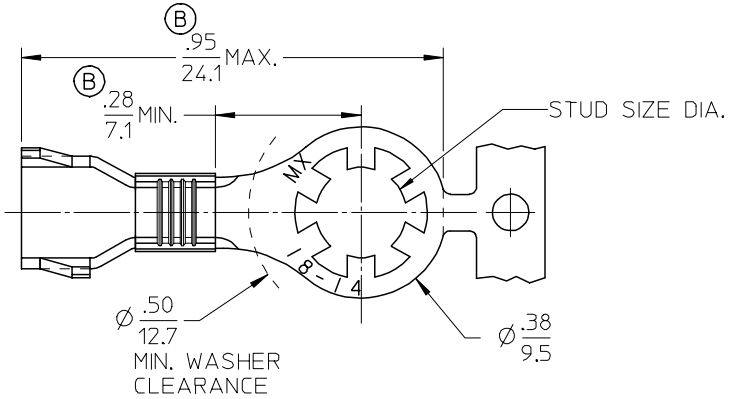

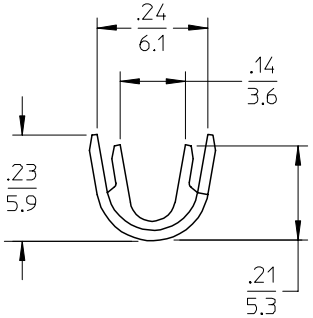

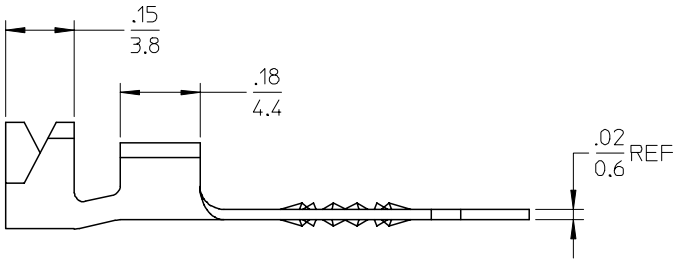

SALES DRAWING

NOTE(S):
1. WIRE: SIZE: 18-14 AWG
0.7 - 2.6 MM^2

UPDATE TO MX STDS			
EC NO: ETC2001-0128			
DRWN:DMYRICK	2005/02/18		
CH'KD:JPAWLICKI	2005/02/18		
APPR: JPAWLICK	2005/02/18		
B		REV	DESCRIPTION

QUALITY SYMBOLS
▼=0
▽=0

GENERAL TOLERANCES (UNLESS SPECIFIED)

	mm	INCH
4 PLACES	± ---	± ---
3 PLACES	± ---	±.005
2 PLACES	±0.13	±.01
1 PLACE	±0.25	± ---
ANGULAR ±1/2°		

DRAFT WHERE APPLICABLE MUST REMAIN WITHIN DIMENSIONS

DIMENSION STYLE: IN/MM
SCALE
DESIGN UNITS: INCH
THIRD ANGLE PROJECTION

DRAWN BY: JHACKNEY	DATE: 1995/05/05	TITLE: OPEN BARREL STRIP STAR RING, VIBRAKRIMP 18-14 AWG
CHECKED BY: RDEROSS	DATE: 1995/05/05	
APPROVED BY: RDEROSS	DATE: 1995/05/05	molex MOLEX INCORPORATED
MATERIAL NO.: SEE CHART		DOCUMENT NO.: SD-19084-001 — SHEET NO.: 1 OF 1
SIZE: B		

THIS DRAWING CONTAINS INFORMATION THAT IS PROPRIETARY TO MOLEX INCORPORATED AND SHOULD NOT BE USED WITHOUT WRITTEN PERMISSION