Chipsmall Limited consists of a professional team with an average of over 10 year of expertise in the distribution of electronic components. Based in Hongkong, we have already established firm and mutual-benefit business relationships with customers from,Europe,America and south Asia,supplying obsolete and hard-to-find components to meet their specific needs.

With the principle of “Quality Parts,Customers Priority,Honest Operation,and Considerate Service”,our business mainly focus on the distribution of electronic components. Line cards we deal with include Microchip,ALPS,ROHM,Xilinx,Pulse,ON,Everlight and Freescale. Main products comprise IC,Modules,Potentiometer,IC Socket,Relay,Connector.Our parts cover such applications as commercial,industrial, and automotives areas.

We are looking forward to setting up business relationship with you and hope to provide you with the best service and solution. Let us make a better world for our industry!

Contact us

Tel: +86-755-8981 8866 Fax: +86-755-8427 6832
Email & Skype: info@chipsmall.com Web: www.chipsmall.com
Address: A1208, Overseas Decoration Building, #122 Zhenhua RD., Futian, Shenzhen, China

FILE NO.	BB-CD-205-03

NOTES:

① MAT'L: COPPER, STOCK TKN .031 ±.001
PLATING: ELECTRO-TIN (.0003 MIN)

② INSULATION: MOLDED PVC (BLUE)

③ "UL" LISTING #E32244
"CSA" LISTING 18689

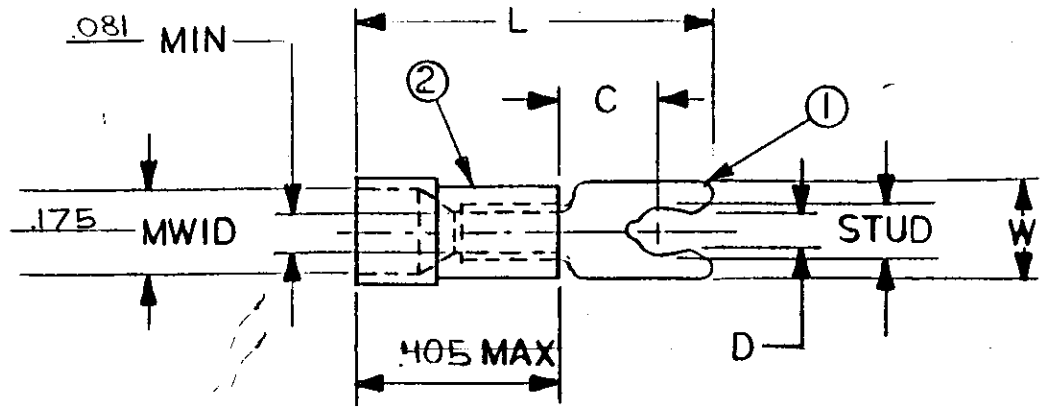

MWID = MAX. WIRE INSULATION DIA.

WIRE SIZE: 16-14 AWG.
1.0-2.5 MM²

PART NUMBER	"W" ±.010	"C" MIN.	"L" MAX.	"D" ±005			AVAILABLE STUD SIZES	
BB-2716-	.310	.261	.871	.139			08X (.173 ±005)	
BB-2717-	.330	.261	.919	.156			10X (.198 ±005)	

DIMENSIONAL TOLERANCES UNLESS OTHERWISE SPECIFIED			REFERENCE	SCALE: NTS	DATE	TITLE: SNAP SPADE SHORT TONGUE TERMINAL. INSULKRIMP SERIES	ETC molex INCORPORATED
FRAC.	DEC.	ANG.		DRWN. BY: GZ	4-5-85		
±	±	±		CHKD. BY:			DWG. NO. A CUSTOMER DWG.
				APPRD. BY:			