Chipsmall Limited consists of a professional team with an average of over 10 year of expertise in the distribution of electronic components. Based in Hongkong, we have already established firm and mutual-benefit business relationships with customers from,Europe,America and south Asia,supplying obsolete and hard-to-find components to meet their specific needs.

With the principle of “Quality Parts,Customers Priority,Honest Operation,and Considerate Service”,our business mainly focus on the distribution of electronic components. Line cards we deal with include Microchip,ALPS,ROHM,Xilinx,Pulse,ON,Everlight and Freescale. Main products comprise IC,Modules,Potentiometer,IC Socket,Relay,Connector.Our parts cover such applications as commercial,industrial, and automotives areas.

We are looking forward to setting up business relationship with you and hope to provide you with the best service and solution. Let us make a better world for our industry!

Contact us

Tel: +86-755-8981 8866 Fax: +86-755-8427 6832
Email & Skype: info@chipsmall.com Web: www.chipsmall.com
Address: A1208, Overseas Decoration Building, #122 Zhenhua RD., Futian, Shenzhen, China

LOOSE PIECE		TAPE MOUNTED		DIMENSIONS									FINISH
MATERIAL NUMBER	ENGINEERING NUMBER	MATERIAL NUMBER	ENGINEERING NUMBER	STUD SIZE	S ±.005	W MAX	C MIN	ID MIN	MWID	B REF	L MAX	H REF	INSULATION COLOR
191190004	A-215-06X	191190005	A-215-06XT	6	.146/3.71	.301/7.6	.207/5.3	.054/1.37	.145/3.68	.450/11.43	.836/21.23	.08/2.0	RED
191190007	A-215-08X	191190008	A-215-08XT	8	.173/4.39	.301/7.6	.207/5.3	.054/1.37	.145/3.68	.450/11.43	.836/21.23	.08/2.0	RED
191190010	A-215-10X	191190051	A-215-10XT	10	.198/5.03	.301/7.6	.207/5.3	.054/1.37	.145/3.68	.450/11.43	.836/21.23	.08/2.0	RED
191190080	B-216-06X	191190027	B-216-06XT	6	.146/3.71	.301/7.6	.209/5.3	.081/2.06	.175/4.45	.450/11.43	.850/21.59	.08/2.0	BLUE
191190029	B-216-08X	191190030	B-216-08XT	8	.173/4.39	.301/7.6	.209/5.3	.081/2.06	.175/4.45	.450/11.43	.850/21.59	.08/2.0	BLUE
191190032	B-216-10X	191190033	B-216-10XT	10	.198/5.03	.301/7.6	.209/5.3	.081/2.06	.175/4.45	.450/11.43	.850/21.59	.08/2.0	BLUE

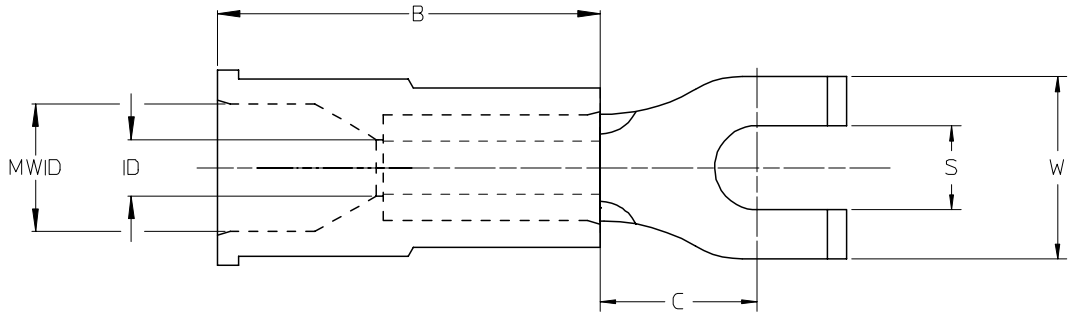

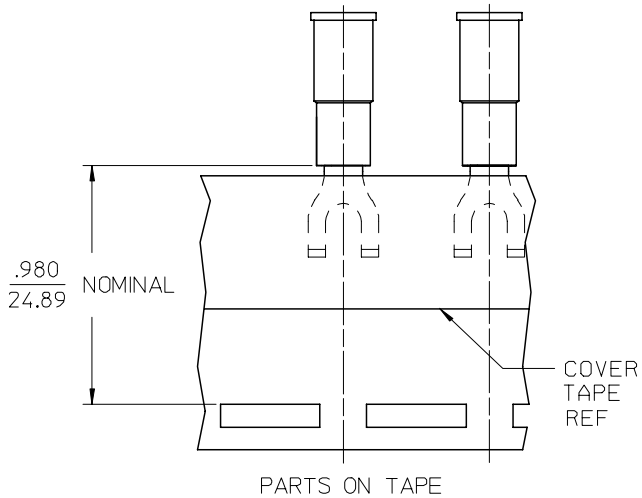

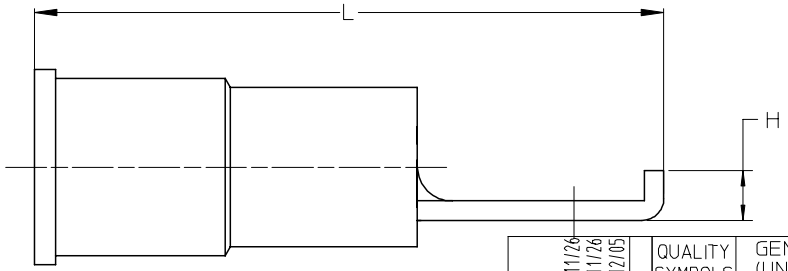

SALES DRAWING

NOTES:
1. MATERIAL: COPPER .031/.79 THICK
2. PLATING: ELECTRO-TIN
3. MWID = MAXIMUM WIRE INSULATION DIAMETER
4. PART IS RoHS COMPLIANT

STANDARDIZE
EC NO: ETC2008-0012 2007/11/26
DRWN:RSTONE 2007/11/26
CH'KD:JMACNEIL 2007/12/05
APPR:JMACNEIL
DESCRIPTION
REV A

QUALITY SYMBOLS
▼=0
▽=0

GENERAL TOLERANCES (UNLESS SPECIFIED)

	mm	INCH
4 PLACES	± ---	± ---
3 PLACES	± ---	± .005
2 PLACES	± 0.13	± .01
1 PLACE	± 0.25	± ---
ANGULAR ±1/2°		

DRAFT WHERE APPLICABLE MUST REMAIN WITHIN DIMENSIONS

DIMENSION STYLE: IN/MM
SCALE: ---
DESIGN UNITS: INCH
THIRD ANGLE PROJECTION

DRAWN BY: KO DATE: 1984/10/25
CHECKED BY: GZ DATE: 1984/11/09
APPROVED BY DATE

TITLE: FLANGED SPADE TERMINAL, INSULKRIMP -200 SERIES, LONG BARREL

molex MOLEX INCORPORATED

MATERIAL NO.: SEE CHART
DOCUMENT NO.: SD-19119-003
SHEET NO.: 1 OF 1
SIZE: B

THIS DRAWING CONTAINS INFORMATION THAT IS PROPRIETARY TO MOLEX INCORPORATED AND SHOULD NOT BE USED WITHOUT WRITTEN PERMISSION