Chipsmall Limited consists of a professional team with an average of over 10 year of expertise in the distribution of electronic components. Based in Hongkong, we have already established firm and mutual-benefit business relationships with customers from,Europe,America and south Asia,supplying obsolete and hard-to-find components to meet their specific needs.

With the principle of “Quality Parts,Customers Priority,Honest Operation,and Considerate Service”,our business mainly focus on the distribution of electronic components. Line cards we deal with include Microchip,ALPS,ROHM,Xilinx,Pulse,ON,Everlight and Freescale. Main products comprise IC,Modules,Potentiometer,IC Socket,Relay,Connector.Our parts cover such applications as commercial,industrial, and automotives areas.

We are looking forward to setting up business relationship with you and hope to provide you with the best service and solution. Let us make a better world for our industry!

Contact us

Tel: +86-755-8981 8866 Fax: +86-755-8427 6832
Email & Skype: info@chipsmall.com Web: www.chipsmall.com
Address: A1208, Overseas Decoration Building, #122 Zhenhua RD., Futian, Shenzhen, China

19193

MATERIAL NUMBER	ENGINEERING NUMBER	STUD SIZE	"S"	PACKAGING
191930206	E-357-08	8	.173/(4.39)	LOOSE PIECE
191930209	E-357-10	10	.198/(5.02)	
191930212	E-357-14	1/4	.265/(6.73)	
191930219	E-357-56	5/16	.328/(8.33)	
191930216	E-357-38	3/8	.390/(9.90)	
191930223	E-357-76	7/16	.453/(11.50)	
191930208	E-357-08T	8	.173/(4.39)	TAPE MOUNTED
191930211	E-357-10T	10	.198/(5.02)	
191930215	E-357-14T	1/4	.265/(6.73)	
191930222	E-357-56T	5/16	.328/(8.33)	
191930218	E-357-38T	3/8	.390/(9.90)	
191930224	E-357-76T	7/16	.453/(11.50)	

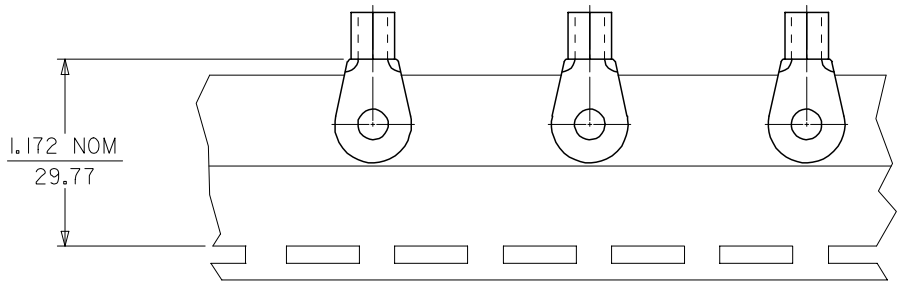

PARTS ON TAPE
DOUBLE SPACED AS SHOWN

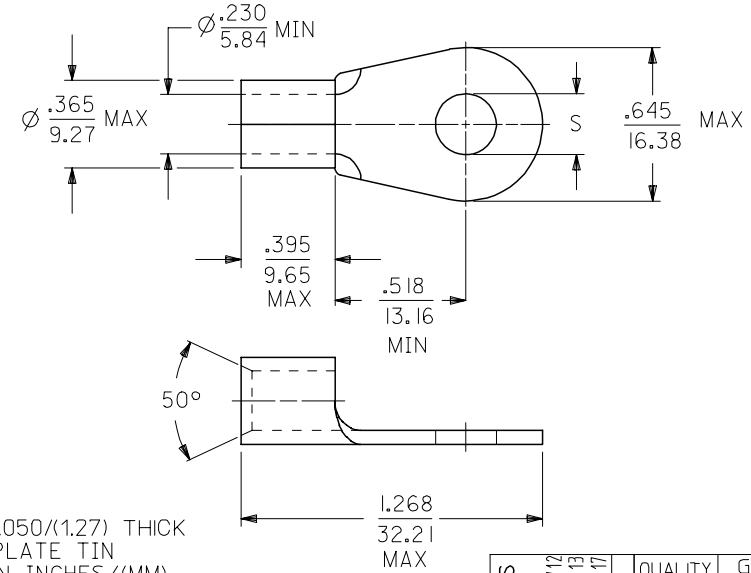

NOTE(S):
1. MATERIAL: COPPER .050/(1.27) THICK
2. PLATING: ELECTROPLATE TIN
3. ALL DIMENSIONS IN INCHES/(MM).
4. WIRE SIZE: 6 AWG
16 MM^2
5. PART IS ROHS COMPLIANT.

SALES DRAWING

REV	DESCRIPTION
B	REVISED MATL THKNS EC NO: ETC2007-0011 DRWN:EHILE 2006/07/12 CH'KD:JMACNEIL 2006/07/13 APPR:RDEROSS 2006/07/17

QUALITY SYMBOLS
▼=0
▽=0

GENERAL TOLERANCES (UNLESS SPECIFIED)

	mm	INCH
4 PLACES	± ---	± ---
3 PLACES	± ---	± .005
2 PLACES	± 0.13	± .01
1 PLACE	± 0.25	± ---
ANGULAR ±1/2°		

DRAFT WHERE APPLICABLE MUST REMAIN WITHIN DIMENSIONS

DIMENSION STYLE: IN/MM
SCALE: ---
DESIGN UNITS: INCH
THIRD ANGLE PROJECTION

DRAWN BY: EDB	DATE: 2000/11/01	
CHECKED BY: HEB	DATE: 2000/11/01	
APPROVED BY: RWD	DATE: 2000/11/01	

TITLE: RING TONGUE TERMINAL VERSAKRIMP 6 AWG

molex MOLEX INCORPORATED

MATERIAL NO.: SEE CHART
DOCUMENT NO.: SD-19193-015
SHEET NO.: 1 OF 1
SIZE: B

THIS DRAWING CONTAINS INFORMATION THAT IS PROPRIETARY TO MOLEX INCORPORATED AND SHOULD NOT BE USED WITHOUT WRITTEN PERMISSION

tb_frame_B_P_ME_T
Rev. D 2004/04/02