Chipsmall Limited consists of a professional team with an average of over 10 year of expertise in the distribution of electronic components. Based in Hongkong, we have already established firm and mutual-benefit business relationships with customers from,Europe,America and south Asia,supplying obsolete and hard-to-find components to meet their specific needs.

With the principle of “Quality Parts,Customers Priority,Honest Operation,and Considerate Service”,our business mainly focus on the distribution of electronic components. Line cards we deal with include Microchip,ALPS,ROHM,Xilinx,Pulse,ON,Everlight and Freescale. Main products comprise IC,Modules,Potentiometer,IC Socket,Relay,Connector.Our parts cover such applications as commercial,industrial, and automotives areas.

We are looking forward to setting up business relationship with you and hope to provide you with the best service and solution. Let us make a better world for our industry!

Contact us

Tel: +86-755-8981 8866 Fax: +86-755-8427 6832
Email & Skype: info@chipsmall.com Web: www.chipsmall.com
Address: A1208, Overseas Decoration Building, #122 Zhenhua RD., Futian, Shenzhen, China

B

board drillings

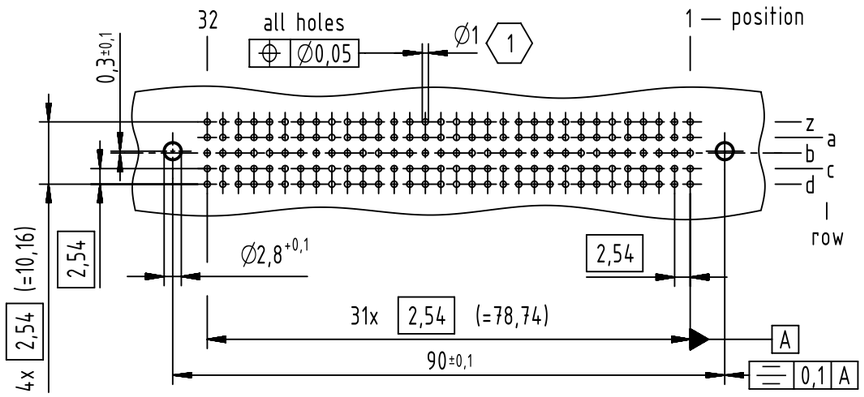

for sheared contacts

W (5:1)

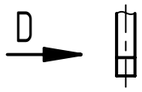

D (5:1)

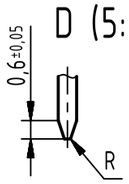

A-A (2:1)

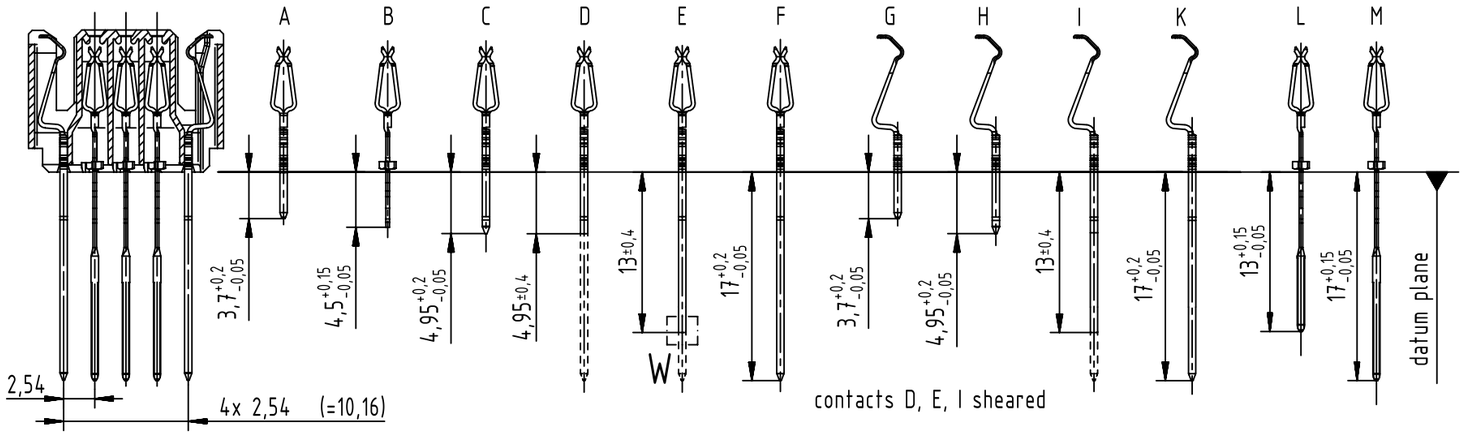

B (2:1)

contact arrangement

□ = position without contact

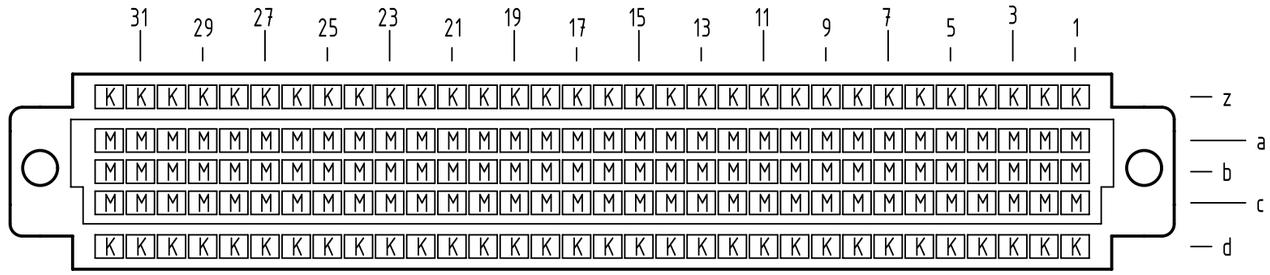

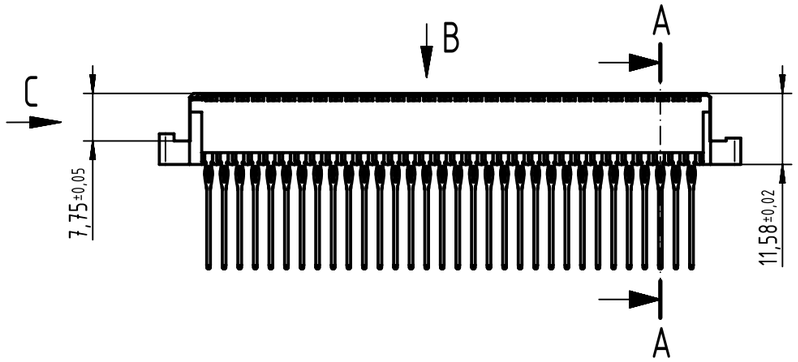

C (2:1)

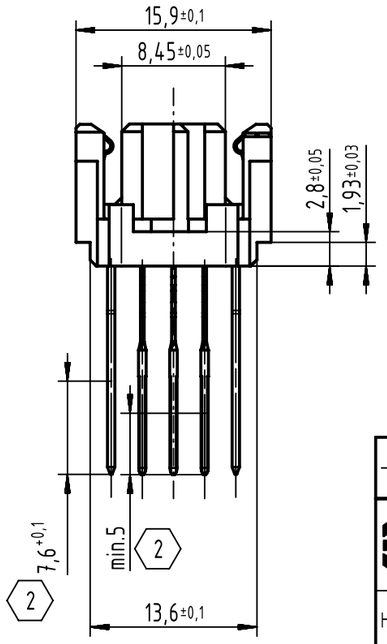

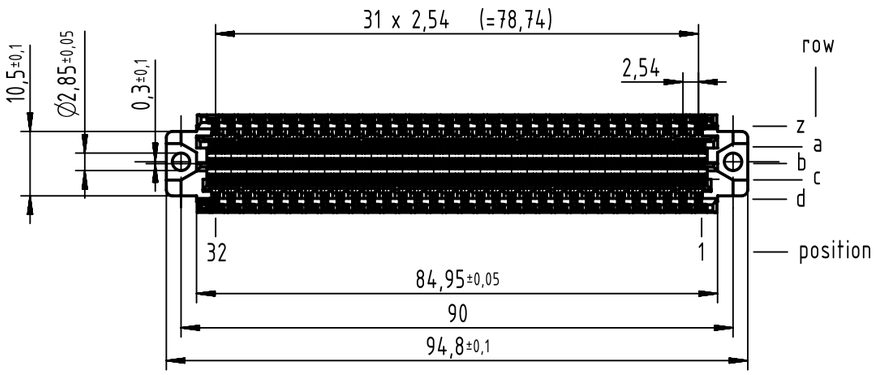

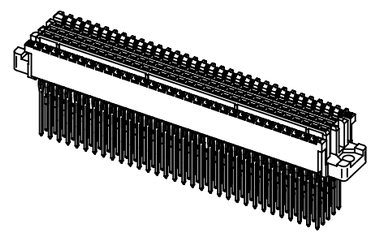

(2) mating zone equal performance level

(1) recommended configuration of plated through holes and further information see: DS 02022100101

part no.	performance level (1)
02 02 160 2301	2
02 02 160 1301	1

All Dimensions in mm
Original Size DIN A3

Scale 1:1

Free size tol. IEC 61076-4-113

Ref.
Sub. TB 0202160X301 500000068399 2013-11-11

All rights reserved

Department EC PD - DE

HARTING Electronics GmbH
D-32339 Espelkamp

Created by	Inspected by	Standardisation	Date	State
ZWAHR	ELLERMANN	HOFFMANN	2015-01-08	Final Release

Title: har-bus 64 female press-in with flange 160-pole

Doc-Key / ECM-Nr.
100070213/UGD/017/D
500000081681

Type: TB

Number: 0202160X301

Rev.: D

Page: 1/1

A3