Chipsmall Limited consists of a professional team with an average of over 10 year of expertise in the distribution of electronic components. Based in Hongkong, we have already established firm and mutual-benefit business relationships with customers from,Europe,America and south Asia,supplying obsolete and hard-to-find components to meet their specific needs.

With the principle of “Quality Parts,Customers Priority,Honest Operation,and Considerate Service”,our business mainly focus on the distribution of electronic components. Line cards we deal with include Microchip,ALPS,ROHM,Xilinx,Pulse,ON,Everlight and Freescale. Main products comprise IC,Modules,Potentiometer,IC Socket,Relay,Connector.Our parts cover such applications as commercial,industrial, and automotives areas.

We are looking forward to setting up business relationship with you and hope to provide you with the best service and solution. Let us make a better world for our industry!

Contact us

Tel: +86-755-8981 8866 Fax: +86-755-8427 6832
Email & Skype: info@chipsmall.com Web: www.chipsmall.com
Address: A1208, Overseas Decoration Building, #122 Zhenhua RD., Futian, Shenzhen, China

NOTES:
1. MATERIALS AND FINISHES:
   BODY - ZINC DIE CAST, NICKEL PLATING
   CONTACT - PHOSPHOR BRONZE, GOLD PLATING (.000003 THICK)
   @ CONTACT AREA ONLY, TIN PLATING AT TAIL, NICKEL PLATED OVERALL
   INSULATOR - POLYPROPYLENE
   HOUSING - PBT 15% G.F., BLACK
   ROUND PIN - BRASS, TIN PLATING
   GROUNDNG TERMINAL - STEEL, TIN PLATING
2. ELECTRICAL:
   A. IMPEDANCE: 75 OHM
   B. FREQUENCY RANGE: DC - 1 GHz
   C. DIELECTRIC WITHSTANDING VOLTAGE: 1500 VRMS, MIN.
3. MECHANICAL:
   A. DURABILITY: 500 CYCLES MIN.
   B. TEMPERATURE RANGE: -55° C TO 85° C
4. PACKAGING:
   A. PACKAGED IN PACKING TRAYS
   B. QUANTITY PER TRAY: 40
5. SEPERATELY SUPPLIED MOUNTNG HARDWARE TO BE TIGHTENED TO 10 IN-LBS MIN/15 IN-LBS MAX WHEN ASSEMBLING TO PANEL

THIRD ANGLE PROJ.

REVISIONS

REV	DESCRIPTION	DATE	ECO	APPR
A	RELEASE TO MFG	9/23/89	42639	CPM
B	PIN CHANGED	4/8/05	45496	CPM
C	UPDATED FORMAT AND NOMINAL ENVELOPE DIMENSIONS	9/10/12	49195	EW

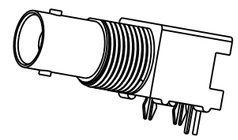

SCALE 1.000

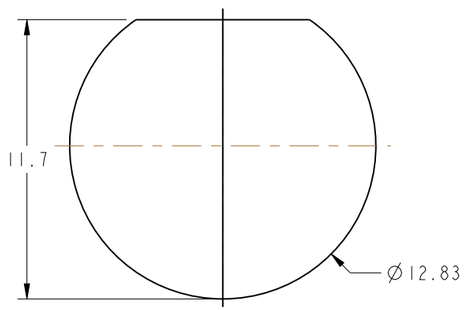

PANEL CUTOUT

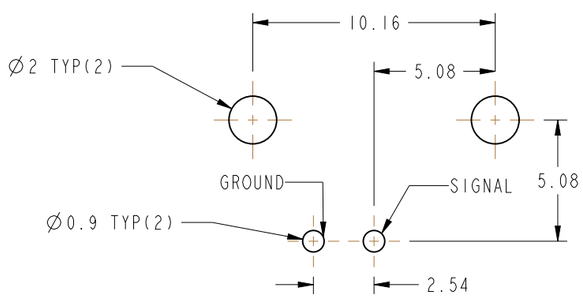

RECOMMENDED PCB LAYOUT

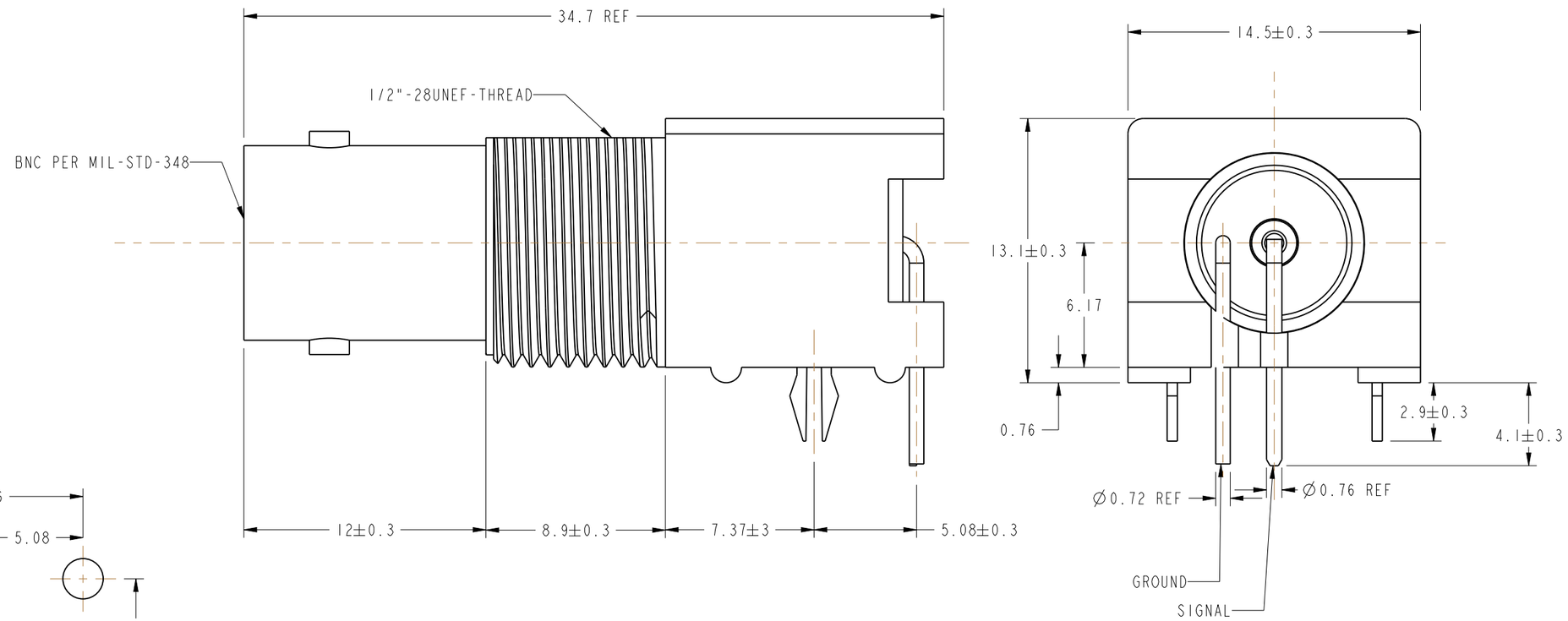

CUSTOMER OUTLINE DRAWING

ALL OTHER SHEETS ARE FOR INTERNAL USE ONLY

UNLESS OTHERWISE SPECIFIED, DIMENSIONS ARE IN METRIC AND TOLERANCES ARE:

<0.5mm	0.5 - 6mm	6 - 30mm	30 - 120mm	ANGLES
± 0.05mm	±0.1mm	±0.2mm	± 0.3mm	±1°

NOTICE - These drawings, specifications, or other data (1) are, and remain the property of Amphenol corp. (2) must be returned upon requiest; and (3) arre confidential and not to be disclosed to any person other than those to whom they are given by Amphenol Corp. the funishing of these drawings, specifications, or other data by Amphenol Corp., or to any other person to anyone for any purpose is not to be regarded by implicatioin or otherwise in any manner licensing, granting rights to permitting such holder or any other sperson to manufacture, use or sell any product, process or design, patented or otherwsie, that may in any way be related to or disclosed by said drawings, specifications, or other data.

MATERIAL
-
-

REFERENCE

CONFIGURATION LEVEL:

FINISH

DRAWN ERIC WANKOFF	DATE 26-Jun-12	
ENGINEER T AUBIN	DATE 8/31/98	
APPROVED T AUBIN	DATE 9/21/98	
CAD FILE		

TITLE
75 OHM BNC
R/A JACK, ISOLATED
LOW PROFILE

SCALE: 4.0:1.0 | SHEET 2 OF 2

DWG SIZE B | REV C

Amphenol RF
www.amphenolrf.com

DRAWING NO. 31-71053-1010
ITEM NO. 31-71053-1010
PART NO. 31-71053-1010