Chipsmall Limited consists of a professional team with an average of over 10 year of expertise in the distribution of electronic components. Based in Hongkong, we have already established firm and mutual-benefit business relationships with customers from,Europe,America and south Asia,supplying obsolete and hard-to-find components to meet their specific needs.

With the principle of “Quality Parts,Customers Priority,Honest Operation,and Considerate Service”,our business mainly focus on the distribution of electronic components. Line cards we deal with include Microchip,ALPS,ROHM,Xilinx,Pulse,ON,Everlight and Freescale. Main products comprise IC,Modules,Potentiometer,IC Socket,Relay,Connector.Our parts cover such applications as commercial,industrial, and automotives areas.

We are looking forward to setting up business relationship with you and hope to provide you with the best service and solution. Let us make a better world for our industry!

Contact us

Tel: +86-755-8981 8866 Fax: +86-755-8427 6832
Email & Skype: info@chipsmall.com Web: www.chipsmall.com
Address: A1208, Overseas Decoration Building, #122 Zhenhua RD., Futian, Shenzhen, China

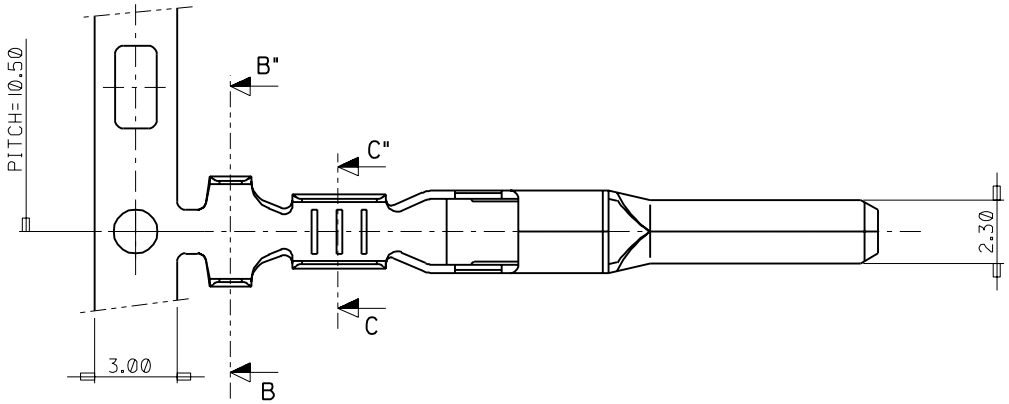

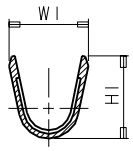

SECTION C-C"

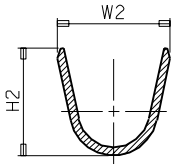

SECTION B-B"

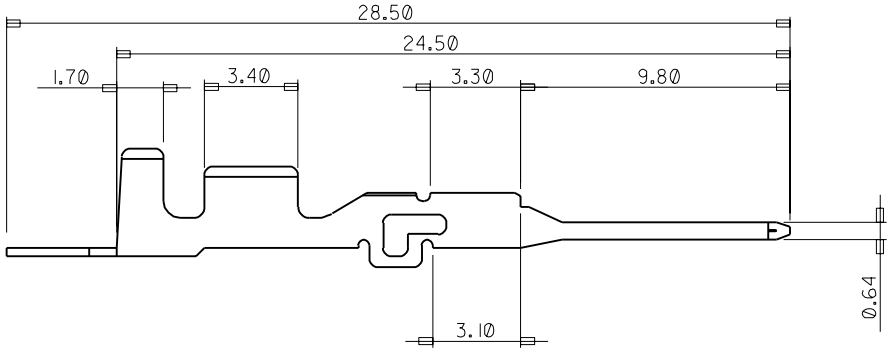

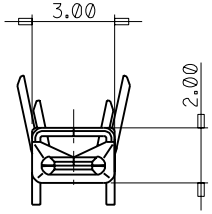

NOTES

1. MATERIAL : PRE-TIN PLATED BRASS 0.3t

ENG.NO	DESCRIPTION	DIMENSION W1	H1	W2	H2	WIRE RANGE mm 2
35420-9702	UNICONN MALE TERMINAL (S)	2.2	2.3	3.7	3.3	AVS(CAVS) 0.3,0.5
35420-9802	UNICONN MALE TERMINAL (M)	2.8	3.0	4.2	4.0	AVS(CAVS) 0.5,0.85,1.25
35420-9902	UNICONN MALE TERMINAL (L)	3.9	4.1	4.9	4.2	AVSS 2f

REVISED KOR1998-0072
EC NO.
DRWN:W.Y.YANG 98/05/08
CH'K:
APPR:
DESCRIPTION
REV B

QUALITY SYMBOLS
MAJOR = 0
CRITICAL (C) = 0

GENERAL TOLERANCES: (UNLESS SPECIFIED)

	mm	INCH
4 PLACES	±0.	±.
3 PLACES	±0.	±.
2 PLACES	±0.30	±.
1 PLACE	±0.30	±.

ANGULAR: ± 5 °

DRAFT WHERE APPLICABLE MUST REMAIN WITHIN DIMENSIONS

SCALE 6:1
DESIGN UNITS ☒ mm ☐ INCH
THIRD ANGLE PROJECTION
DIMENSIONS: ☐ mm/INCH ☐ INCH/mm ☒ mm ONLY
SHT REV
REVISE ON CAD ONLY

DRAWN BY & DATE W.Y.YANG 97/11/17
CHECKED BY & DATE B.K.CHOI 97/11/17
APPROVED BY & DATE C.W.LEE 97/11/17
CAD FILENAME S4209702.DGN

TITLE: UNICONN MALE TERMINAL

molex MOLEX INCORPORATED KOREA

MATERIAL NO. SEE TABLE
DRAWING NO. SD 35420-9*02
SHEET NO. 1OF1
SIZE B

THIS DRAWING CONTAINS INFORMATION THAT IS PROPRIETARY TO MOLEX INCORPORATED AND SHOULD NOT BE USED WITHOUT WRITTEN PERMISSION.

MX-A3

DWG. NO.
SIMILAR ITEM
PROJECT NO.
DO NOT SCALE DRAWING
DIMENSION IN METRIC