Chipsmall Limited consists of a professional team with an average of over 10 year of expertise in the distribution of electronic components. Based in Hongkong, we have already established firm and mutual-benefit business relationships with customers from,Europe,America and south Asia,supplying obsolete and hard-to-find components to meet their specific needs.

With the principle of “Quality Parts,Customers Priority,Honest Operation,and Considerate Service”,our business mainly focus on the distribution of electronic components. Line cards we deal with include Microchip,ALPS,ROHM,Xilinx,Pulse,ON,Everlight and Freescale. Main products comprise IC,Modules,Potentiometer,IC Socket,Relay,Connector.Our parts cover such applications as commercial,industrial, and automotives areas.

We are looking forward to setting up business relationship with you and hope to provide you with the best service and solution. Let us make a better world for our industry!

Contact us

Tel: +86-755-8981 8866 Fax: +86-755-8427 6832
Email & Skype: info@chipsmall.com Web: www.chipsmall.com
Address: A1208, Overseas Decoration Building, #122 Zhenhua RD., Futian, Shenzhen, China

REV	CHANGE	DATE	DRN	CHK
	Drawn	3	SJ	T

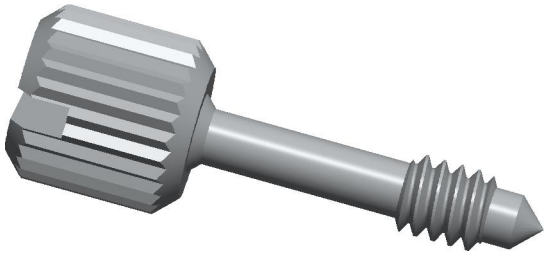

TOLERANCE DETAILS					
1	D	+ 0.010 [+ 0.25] - 0.000 [-0.00]	6	PD	+ 0.000 [+ 0.00] - 0.010 [-0.25]
2	L	±0.015 [±0.38]	7	PL	±0.015 [±0.38]
3	W	+ 0.005 [+ 0.13] - 0.000 [-0.00]	8	SD	±0.005 [±0.13]
4	HD	+ 0.015 [+ 0.38] - 0.000 [-0.00]	9	SL	±0.010 [±0.25]
5	HL	±0.010 [±0.25]	10	TL	+ 0.000 [+ 0.00] - 0.015 [-0.38]

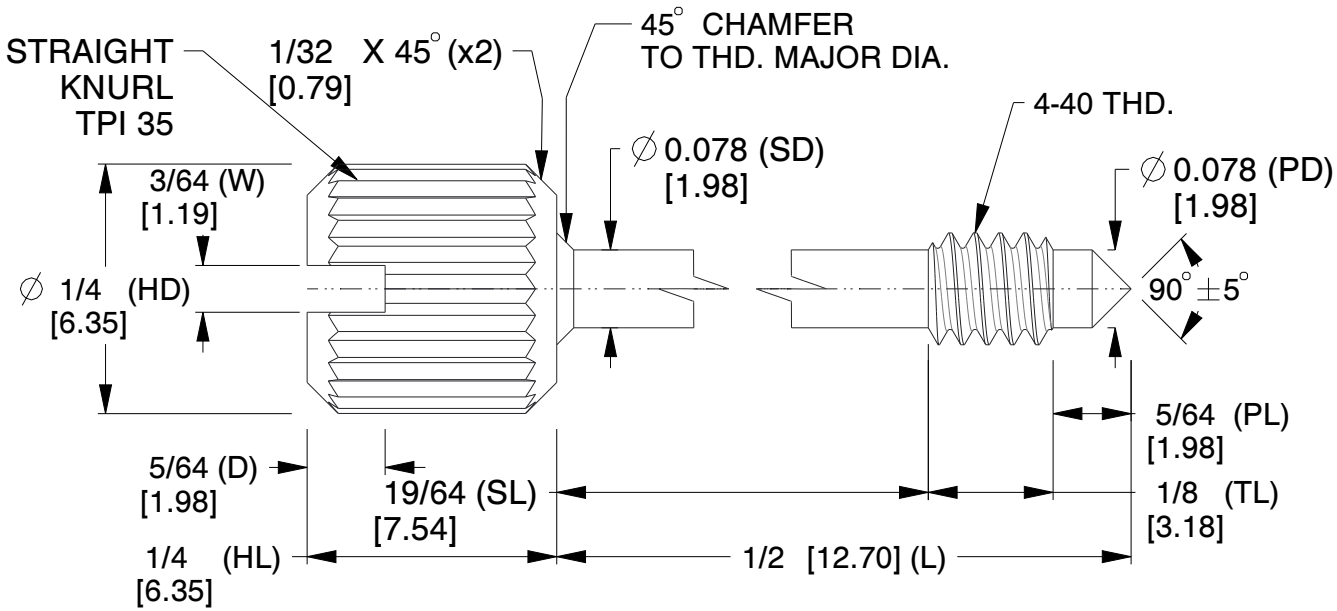

NOTES:

1. Material : Stainless Steel
2. Finish : No Plate
3. ASME Y14.5-M - 2009
4. All Drawing Dimensions are in Inches [mm]
5. Unless otherwise specified; Edge Breaks, Radii or Countersinks 0.005-0.015

COMPONENT	PANEL SCREW

95 Silvermine Rd.,Seymour CT 06483
Tel: 203-888-2133, Fax: 203-888-9860

This Drawing is the Property of RAF. It contains confidential, proprietary information that is RAF property. Do not disclose to or duplicate for others except as authorized by RAF.

TOLERANCES
ALL DIMENSIONS ARE INCHES
(UNLESS OTHERWISE SPECIFIED)
METALLIC
LENGTHS </= : 6 INCHES ± 0.005
LENGTH >: 6 INCHES ±0.010
DIAMETERS: ±0.005
NON-METALLIC
LENGTH: ±0.010 DIAMETERS: ± 0.010
INTERNAL THREADS:
MINIMUM THREAD DEPTH

0369-SS

CAPTIVE PANEL SCREW STYLE 2

SCALE
5.20
SHEET
1 of 1