Chipsmall Limited consists of a professional team with an average of over 10 year of expertise in the distribution of electronic components. Based in Hongkong, we have already established firm and mutual-benefit business relationships with customers from,Europe,America and south Asia,supplying obsolete and hard-to-find components to meet their specific needs.

With the principle of “Quality Parts,Customers Priority,Honest Operation,and Considerate Service”,our business mainly focus on the distribution of electronic components. Line cards we deal with include Microchip,ALPS,ROHM,Xilinx,Pulse,ON,Everlight and Freescale. Main products comprise IC,Modules,Potentiometer,IC Socket,Relay,Connector.Our parts cover such applications as commercial,industrial, and automotives areas.

We are looking forward to setting up business relationship with you and hope to provide you with the best service and solution. Let us make a better world for our industry!

Contact us

Tel: +86-755-8981 8866 Fax: +86-755-8427 6832
Email & Skype: info@chipsmall.com Web: www.chipsmall.com
Address: A1208, Overseas Decoration Building, #122 Zhenhua RD., Futian, Shenzhen, China

SD-39373-001

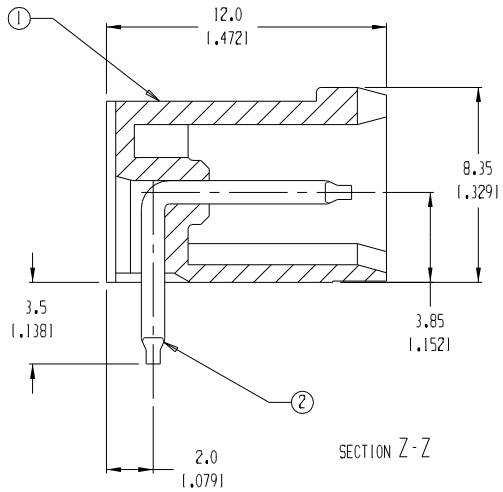

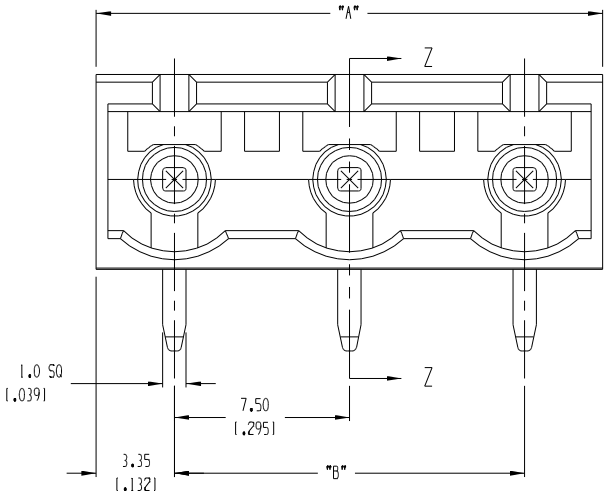

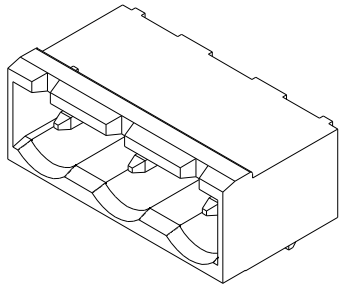

B AUX. VIEW
SCALE 3:1

MATERIAL NUMBER	NUMBER OF CIRCUITS "XX"	A	B
039373-0002	2	14.2 [0.56]	7.50 [.295]
039373-0003	3	21.7 [0.85]	15.00 [.591]
039373-0004	4	29.2 [1.15]	22.50 [.886]
039373-0005	5	36.7 [1.44]	30.00 [1.181]
039373-0006	6	44.2 [1.74]	37.50 [1.476]
039373-0007	7	51.7 [2.04]	45.00 [1.772]
039373-0008	8	59.2 [2.33]	52.50 [2.067]
039373-0009	9	66.7 [2.63]	60.00 [2.362]
039373-0010	10	74.2 [2.92]	67.50 [2.657]
039373-0011	11	81.7 [3.22]	75.00 [2.953]
039373-0012	12	89.2 [3.51]	82.50 [3.248]

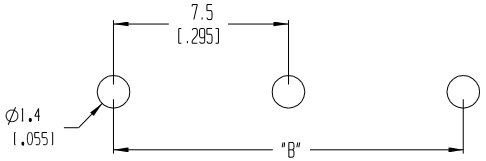

PTH PATTERN
RECOMMENDED

NOTES:

1. MATERIAL: SEE TABLE
2. FINISHES: SEE TABLE
3. PRODUCT SPECIFICATION: NOT REQUIRED
4. PACKAGING: NOT REQUIRED
5. MATES WITH: 7MM PLUG
6. "XX" - REFERS TO the NUMBER OF CIRCUIT POSITIONS

ITEM	QTY.	DESCRIPTION	MATERIAL	FINISH
-	-	-	-	-
-	-	-	-	-
2	XX	PIN	PHOS. BRONZE	TIN-PLATED
1	1	HOUSING	POLYMIDE	BLACK

EC NO. ECN# 3846
DRWN: CY 09-03-04
CH'K:
APPR:
DESCRIPTION
REV B

QUALITY SYMBOLS
MAJOR
CRITICAL C
SPC S

GENERAL TOLERANCES: (UNLESS SPECIFIED)

	mm	INCH
4 PLACES		±.0015
3 PLACES	±.038	±.005
2 PLACES	±.13	±.01
1 PLACE	±.3	
ANGULAR: ±2°		

DRAFT WHERE APPLICABLE MUST REMAIN WITHIN DIMENSIONS

SCALE 5:1
DESIGN UNITS ☐ mm ☒ INCH
THIRD ANGLE PROJECTION

DRAWN BY & DATE W HOWARD 07/21/03
CHECKED BY & DATE R. KEMP 07/23/03
APPROVED BY & DATE P. WALTZ 07/23/03
CAD FILENAME 3719XX

PROJECT NO. - | - | -
DIMENSIONS: ☒ mm/INCH ☐ INCH/mm ☐ mm ONLY | SHT | REV
REVISE ON CAD ONLY

TITLE: 7.5MM RA, HEADER

MOLEX INCORPORATED

MATERIAL NO. SEE CHART
DRAWING NO. SD-39373-001
SHEET NO. 1 OF 1
SIZE B

THIS DRAWING CONTAINS INFORMATION THAT IS PROPRIETARY TO MOLEX INCORPORATED AND SHOULD NOT BE USED WITHOUT WRITTEN PERMISSION.