Chipsmall Limited consists of a professional team with an average of over 10 year of expertise in the distribution of electronic components. Based in Hongkong, we have already established firm and mutual-benefit business relationships with customers from,Europe,America and south Asia,supplying obsolete and hard-to-find components to meet their specific needs.

With the principle of “Quality Parts,Customers Priority,Honest Operation,and Considerate Service”,our business mainly focus on the distribution of electronic components. Line cards we deal with include Microchip,ALPS,ROHM,Xilinx,Pulse,ON,Everlight and Freescale. Main products comprise IC,Modules,Potentiometer,IC Socket,Relay,Connector.Our parts cover such applications as commercial,industrial, and automotives areas.

We are looking forward to setting up business relationship with you and hope to provide you with the best service and solution. Let us make a better world for our industry!

Contact us

Tel: +86-755-8981 8866 Fax: +86-755-8427 6832
Email & Skype: info@chipsmall.com Web: www.chipsmall.com
Address: A1208, Overseas Decoration Building, #122 Zhenhua RD., Futian, Shenzhen, China

ITEM NO.	FORM	WIRE GAGE	RANGE OF INSULATION DIA.	DIM. "A"	DIM. "B"	DIM. "C"	DIM. "D"	DIM. "E"	DIM. "F"	FINISH (SEE NOTE 2)
46012-1141	CHAIN	18-20 GA.	.051-.122 (1.30-3.10)	.075±.012 (1.90±.30)	.091±.016 (2.30±.40)	.020 (.50)	.142±.012 (3.60±.30)	.177±.016 (4.50±.40)	.035 (.90)	FINISH 1 - BRIGHT TIN OVER NICKEL
46012-1142	LOOSE									
46012-3141	CHAIN	16 GA.	.122 (3.10) MAX.	.091±.012 (2.30±.30)	.106±.016 (2.70±.40)	.024 (.60)	.142±.012 (3.60±.30)	.177±.016 (4.50±.40)	.035 (.90)	
46012-3142	LOOSE									
46012-1241	CHAIN	18-20 GA.	.051-.122 (1.30-3.10)	.075±.012 (1.90±.30)	.091±.016 (2.30±.40)	.020 (.50)	.142±.012 (3.60±.30)	.177±.016 (4.50±.40)	.035 (.90)	FINISH 2 - SEL. GOLD AND SEL. MATTE TIN OVER NICKEL
46012-1242	LOOSE									
46012-3241	CHAIN	16 GA.	.122 (3.10) MAX.	.091±.012 (2.30±.30)	.106±.016 (2.70±.40)	.024 (.60)	.142±.012 (3.60±.30)	.177±.016 (4.50±.40)	.035 (.90)	
46012-3242	LOOSE									

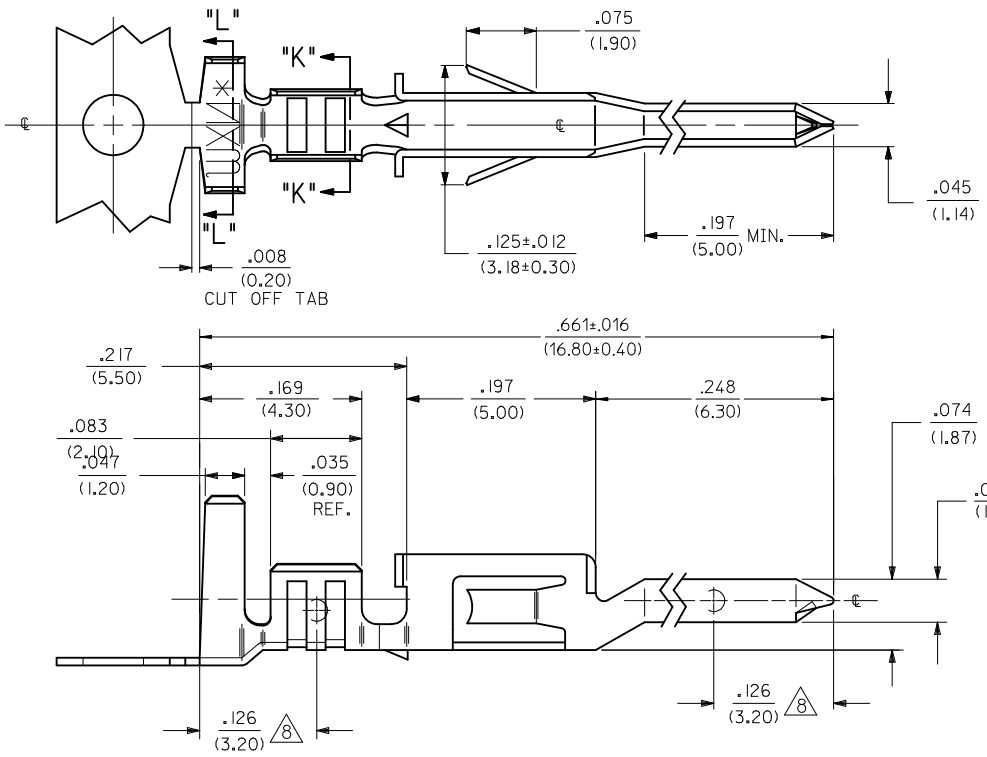

NOTES:

1. MATERIAL:
   COPPER ALLOY .0080/(.203) THICK.
2. FINISH:
   1= .000100/(0.00254) MIN. BRIGHT TIN OVER .000050/(0.00127) MIN NICKEL OVERALL.
   2= .000030/(.00076) MIN SELECT GOLD IN CONTACT AREA AND .000100/(0.00254) MIN SELECT MATTE TIN IN CRIMP AREA OVER .000050/(0.00127) MIN NICKEL OVERALL.
   GOLD PLATING RECOMMENDED FOR APPLICATIONS WHERE FRETTING CORROSION IS A CONCERN.
3. PRODUCT SPECIFICATION: PS-45750-001 (JR.), PS-45750-002 (BMI), PS-45750-003 (TPA)
4. PACKAGING SPECIFICATION: PK-46012-001 FOR CHAIN TERMINALS
   PK-5556-003 FOR LOOSE TERMINALS.
5. TERMINAL FOR USE WITH MOLEX PLUG HOUSINGS 5559, 42475, 43770 AND 30068.
6. THIS TERMINAL IS DESIGNED FOR SINGLE WIRE CRIMPING.
7. WHEN TERMINALS ARE INSTALLED IN THE HOUSINGS, THE WIRES ARE TO BE DRESSED IN SUCH A MANNER TO ALLOW THE TERMINALS TO FLOAT FREELY IN THE POCKETS.

8 MEASURING POINT FOR PLATING THICKNESS.

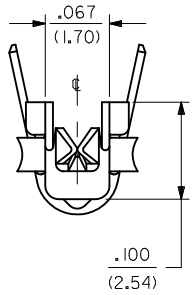

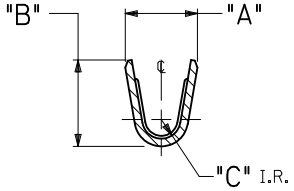

SECT. "K-K"
(VIEW ROTATED 90° CW)

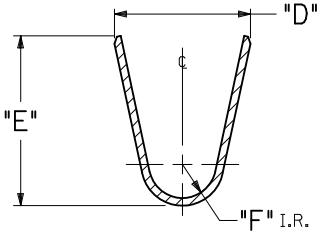

SECT. "L-L"
(VIEW ROTATED 90° CW)

LEGEND:

46012 - * * 4 *

- BASE NO.
- WIRE GAGE: 1= 18-20, 3= 16
- PLATING: 1= TIN, 2= GOLD
- CHAIN OR LOOSE: 1= CHAIN, 2= LOOSE

MODIFIED NOTES			
EC NO: UCP2010-0471	DRWN: J JAGUILAR	CHKD: J BELL	APPR: F SMITH
2009/12/23	2009/12/23	2009/12/28	2009/12/28
D2			

DESCRIPTION / REV

QUALITY SYMBOLS: ▼=0, (C)=0

GENERAL TOLERANCES (UNLESS SPECIFIED)

	mm	INCH
4 PLACES	± ---	± ---
3 PLACES	± ---	± .010
2 PLACES	± 0.25	± .015
1 PLACE	± 0.38	± ---
ANGULAR ±1/2°		

DRAFT WHERE APPLICABLE MUST REMAIN WITHIN DIMENSIONS

DIMENSION STYLE: IN/MM

SCALE

DESIGN UNITS: METRIC

THIRD ANGLE PROJECTION

DRAWN BY	TGREGORI	DATE 2005/07/28
CHECKED BY	GPOLGAR	DATE 2005/07/28
APPROVED BY	JCOMERCI	DATE 2005/07/28

TITLE: TERM., MALE, CRIMP MINI-FIT JR. HCS PLUS SERIES

molex MOLEX INCORPORATED

MATERIAL NO.: SEE CHART

DOCUMENT NO.: SD-46012-001

SHEET NO.: 1 OF 1

SIZE: C

THIS DRAWING CONTAINS INFORMATION THAT IS PROPRIETARY TO MOLEX INCORPORATED AND SHOULD NOT BE USED WITHOUT WRITTEN PERMISSION