Chipsmall Limited consists of a professional team with an average of over 10 year of expertise in the distribution of electronic components. Based in Hongkong, we have already established firm and mutual-benefit business relationships with customers from,Europe,America and south Asia,supplying obsolete and hard-to-find components to meet their specific needs.

With the principle of “Quality Parts,Customers Priority,Honest Operation,and Considerate Service”,our business mainly focus on the distribution of electronic components. Line cards we deal with include Microchip,ALPS,ROHM,Xilinx,Pulse,ON,Everlight and Freescale. Main products comprise IC,Modules,Potentiometer,IC Socket,Relay,Connector.Our parts cover such applications as commercial,industrial, and automotives areas.

We are looking forward to setting up business relationship with you and hope to provide you with the best service and solution. Let us make a better world for our industry!

Contact us

Tel: +86-755-8981 8866 Fax: +86-755-8427 6832
Email & Skype: info@chipsmall.com Web: www.chipsmall.com
Address: A1208, Overseas Decoration Building, #122 Zhenhua RD., Futian, Shenzhen, China

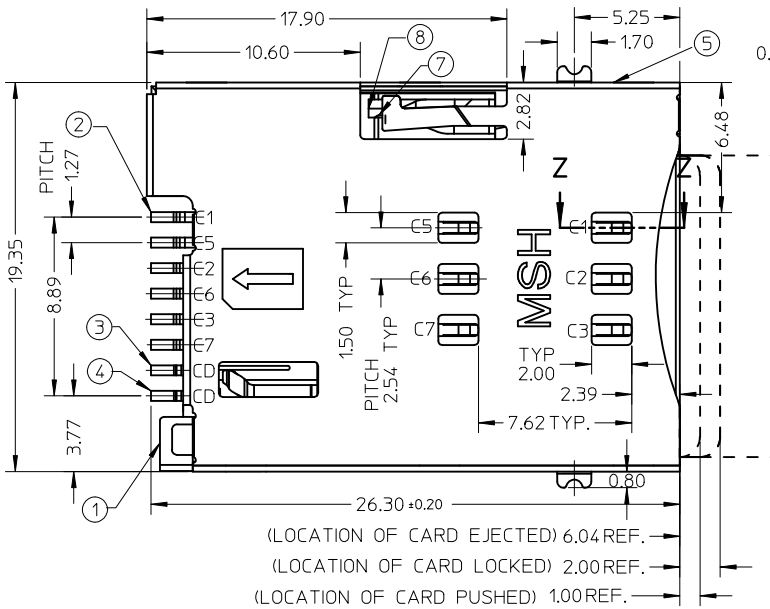

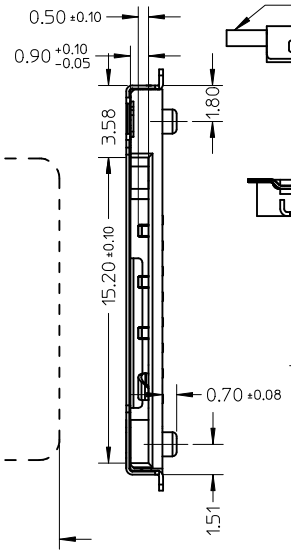

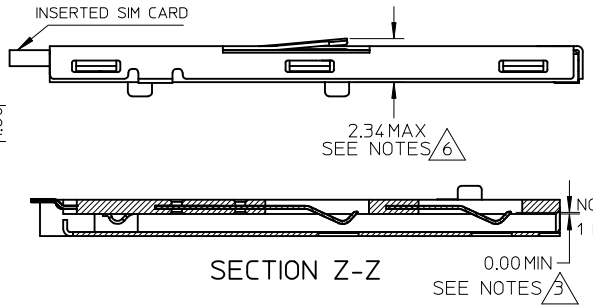

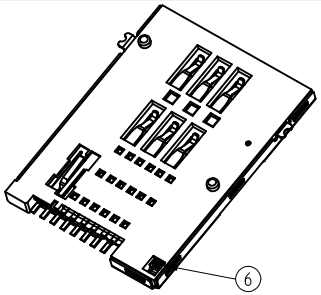

NOTES:
1 FINISH:
1-1 TERMINAL :
50~200μ" NICKEL UNDER PLATED
15μ" GOLD PLATING ON CONTACT AREA
3μ" MIN GOLD FLASH ON SOLDERING AREA
1-2 SHELL :
50~200μ"NICKEL UNDER PLATED
3μ" MIN GOLD FLASH ON SOLDERING AREA
1-3 DETECT PIN :
50~200μ" NICKEL UNDER PLATED
3μ" MIN GOLD PLATING ON CONTACT AREA
3μ" MIN GOLD PLATING ON SOLDERING AREA
2 SOLDER TAIL COPLANARITY: 0.08MM MAX.
3 TERMINALTIP MUST SINK INTO HOUSING
4 PRODUCT COMPLIANT TO ROHS DIRECTIVE 2002/95/EC AND ELV DIRECTIVE 2000/53/EC
5 DETECT SWITCH: INSERT CARD=ON (NORMAL=OPEN)
6.SPRING RISE UP DURING PUSH-PUSH PERIOD
7.PACKAGE DRAWING: PK-47553-001
8.PRODUCT SPECIFICATION: PS-47553-201

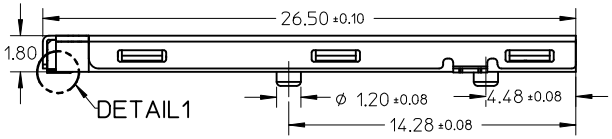

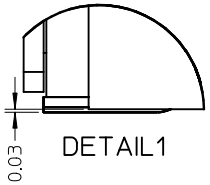

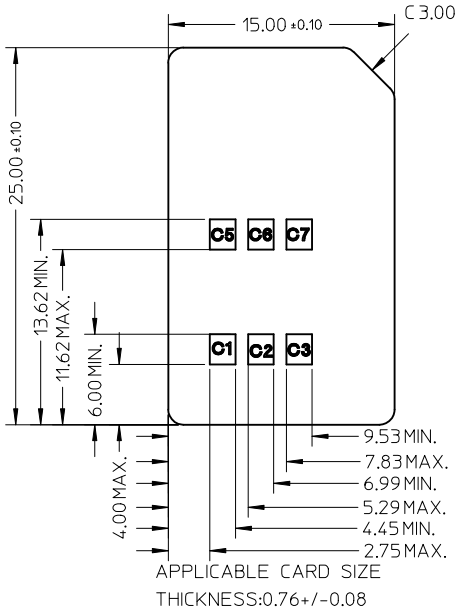

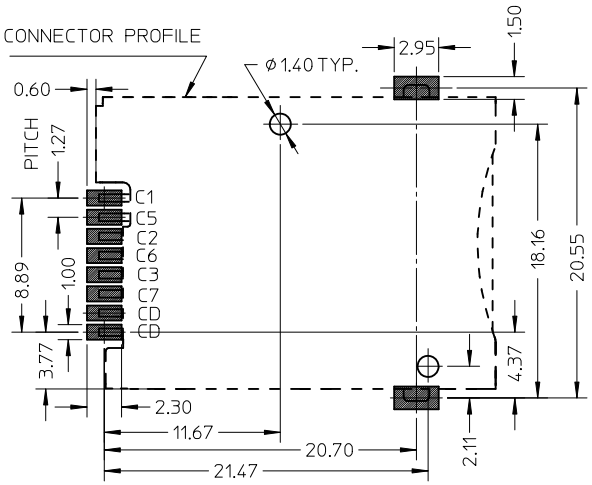

RECOMMENDED PCB LAYOUT
TOLERANCE +/-0.05MM

CARD INSERTED

WITHOUT CARD

NO.	DESCRIPTION	Q'TY	MATERIAL
1	HOUSING	1	HIGH TEMPERATURE THERMOPLASTIC
2	TERMINAL	6	COPPER ALLOY
3	DETECT PIN LOWER	1	COPPER ALLOY
4	DETECT PIN UPPER	1	COPPER ALLOY
5	SHELLL	1	STAINLESS STEEL
6	COIL SPRING	1	PIANO WIRE
7	HEART CAM	1	HIGH TEMPERATURE THERMOPLASTIC
8	CAM PIN	1	STAINLESS STEEL

NEW DIM TOL CTRL
EC NO:
DRWN:KHLIM
CH'KD:JTANO2
APPR:
2011/05/27
DESCRIPTION
REV
A1

QUALITY SYMBOLS
▼=0
(C)=0

GENERAL TOLERANCES (UNLESS SPECIFIED)	mm	INCH
4 PLACES	± ---	± ---
3 PLACES	± ---	± ---
2 PLACES	± 0.15	± ---
1 PLACE	± ---	± ---
ANGULAR ±---°		

DRAFT WHERE APPLICABLE MUST REMAIN WITHIN DIMENSIONS

DIMENSION STYLE: MM ONLY
SCALE: NTS
DESIGN UNITS: METRIC
THIRD ANGLE PROJECTION

		DATE
DRAWN BY	LHSHEN	2007/07/09
CHECKED BY	XUXIANG	2007/08/30
APPROVED BY	HWWANG	2007/08/30

TITLE
PUSH PUSH 6 PINS SIM WITH DETECT PIN&POST SALES DRAWING

molex MOLEX INCORPORATED

MATERIAL NO. 475532001
DOCUMENT NO. SD-47553-201
SHEET NO. 1 OF 1
SIZE A3

THIS DRAWING CONTAINS INFORMATION THAT IS PROPRIETARY TO MOLEX INCORPORATED AND SHOULD NOT BE USED WITHOUT WRITTEN PERMISSION