Chipsmall Limited consists of a professional team with an average of over 10 year of expertise in the distribution of electronic components. Based in Hongkong, we have already established firm and mutual-benefit business relationships with customers from,Europe,America and south Asia,supplying obsolete and hard-to-find components to meet their specific needs.

With the principle of “Quality Parts,Customers Priority,Honest Operation,and Considerate Service”,our business mainly focus on the distribution of electronic components. Line cards we deal with include Microchip,ALPS,ROHM,Xilinx,Pulse,ON,Everlight and Freescale. Main products comprise IC,Modules,Potentiometer,IC Socket,Relay,Connector.Our parts cover such applications as commercial,industrial, and automotives areas.

We are looking forward to setting up business relationship with you and hope to provide you with the best service and solution. Let us make a better world for our industry!

Contact us

Tel: +86-755-8981 8866 Fax: +86-755-8427 6832
Email & Skype: info@chipsmall.com Web: www.chipsmall.com
Address: A1208, Overseas Decoration Building, #122 Zhenhua RD., Futian, Shenzhen, China

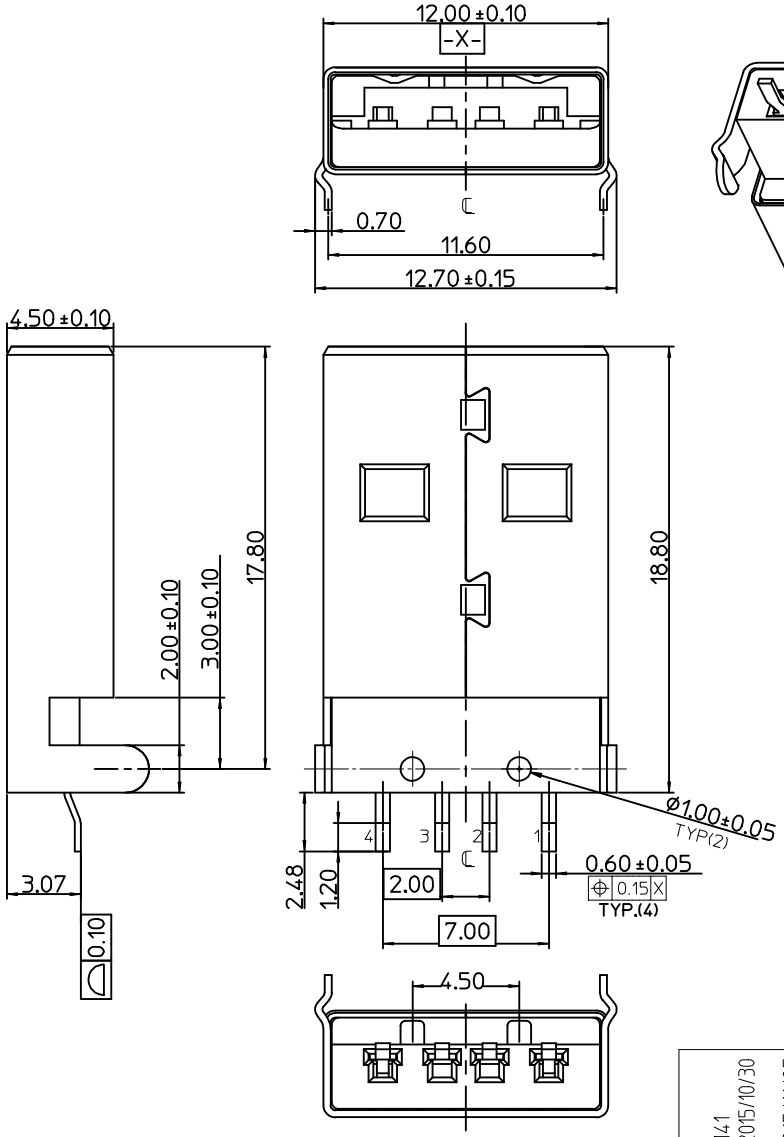

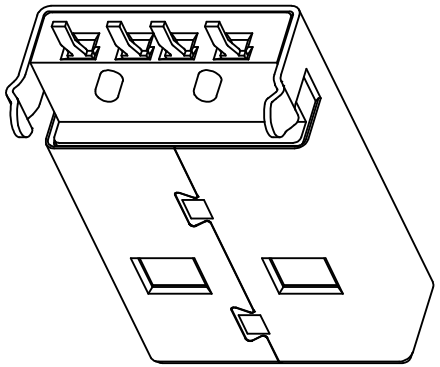

NOTES:
1. MATERIAL:
SHELL: SPCC,
HOUSING: THERMOPLASTIC GLASS FIBER FILLED.
UL94V-0, COLOR: BLACK.
CONTACT: BRASS
2. PLATING:
TERMINAL:
CONTACT AREA: GOLD(Au)
THICKNESS=30 MICROINCH MINIMUM.
SOLDER TAIL: TIN(Sn), ALLOY.
THICKNESS=120 MICROINCH MINIMUM.
UNDER PLATED: NICKEL(Ni), THICKNESS=50 MICROINCH MINIMUM.
METAL SHELL:
NICKEL(Ni). THICKNESS=120 MICROINCH MINIMUM.
UNDER PLATE: COPPER(Cu), THICKNESS=50 MICROINCH MINIMUN.
3. RECOMMENDED PCB THICKNESS: 1.20~1.60mm
4. PRODUCT SPECIFICATION: REFERS TO PS-48037-001
5. PACKAGE SPECIFICATION: SEE TABLE
6. TEST SUMMARY: REFERS TO TS-48037-001

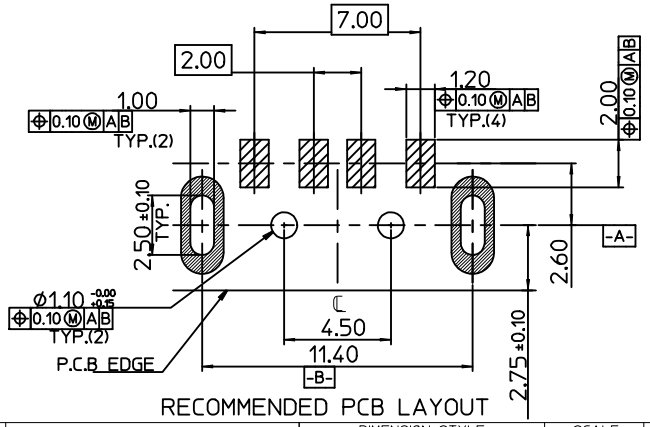

RECOMMENDED PCB LAYOUT

MOLEX P/N	PACKAGE	PACKAGE SPEC
48037-2000	T&R	PK-48037-200
48037-1000	TRAY	PK-48037-001

REVISE			
EC NO:	SH2016-0141		
DRWN:	FYANG05	2015/10/30	
CHKD:			
APPR:	RZHANG	2015/11/05	
REV	D	DESCRIPTION	

QUALITY SYMBOLS: F_A=0, F_C=0, F_P=0

GENERAL TOLERANCES (UNLESS SPECIFIED)

	mm	INCH
4 PLACES	± ---	± ---
3 PLACES	± ---	± ---
2 PLACES	± 0.25	± ---
1 PLACE	± 0.25	± ---
ANGULAR ± 3 °		

DRAFT WHERE APPLICABLE MUST REMAIN WITHIN DIMENSIONS

DIMENSION STYLE: MM ONLY
SCALE: 1:1
DESIGN UNITS
THIRD ANGLE PROJECTION

DRAWN BY: COLIN DUANG DATE: 2003/08/22
CHECKED BY: DATE:
APPROVED BY: WILSON CHANG DATE: 2003/08/22

TITLE: USB A TYPE PLUG R/A CONNECTOR(SMT)

MOLEX INCORPORATED

MATERIAL NO.: SEE TABLE
DOCUMENT NO.: SD-48037-002
SHEET NO.: 1 OF 1
SIZE: A3

THIS DRAWING CONTAINS INFORMATION THAT IS PROPRIETARY TO MOLEX INCORPORATED AND SHOULD NOT BE USED WITHOUT WRITTEN PERMISSION