Chipsmall Limited consists of a professional team with an average of over 10 year of expertise in the distribution of electronic components. Based in Hongkong, we have already established firm and mutual-benefit business relationships with customers from,Europe,America and south Asia,supplying obsolete and hard-to-find components to meet their specific needs.

With the principle of “Quality Parts,Customers Priority,Honest Operation,and Considerate Service”,our business mainly focus on the distribution of electronic components. Line cards we deal with include Microchip,ALPS,ROHM,Xilinx,Pulse,ON,Everlight and Freescale. Main products comprise IC,Modules,Potentiometer,IC Socket,Relay,Connector.Our parts cover such applications as commercial,industrial, and automotives areas.

We are looking forward to setting up business relationship with you and hope to provide you with the best service and solution. Let us make a better world for our industry!

Contact us

Tel: +86-755-8981 8866 Fax: +86-755-8427 6832
Email & Skype: info@chipsmall.com Web: www.chipsmall.com
Address: A1208, Overseas Decoration Building, #122 Zhenhua RD., Futian, Shenzhen, China

DWG. NO. SD-50080-8*00

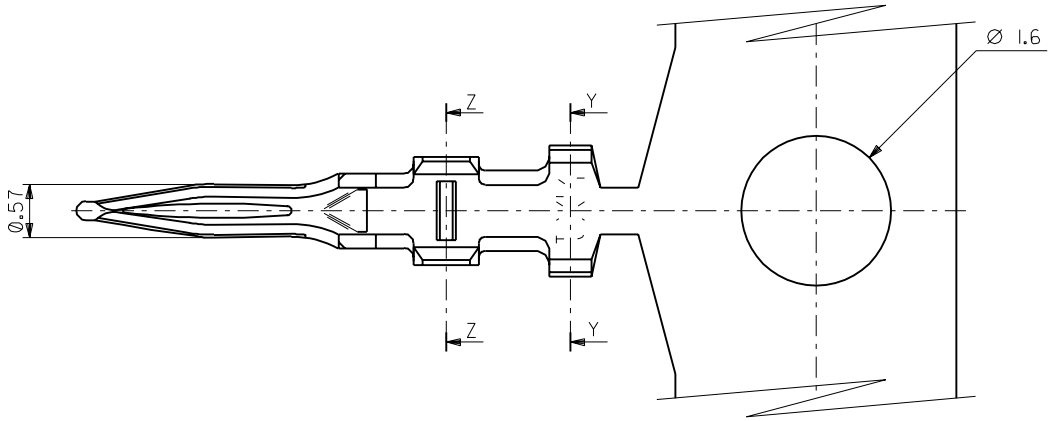

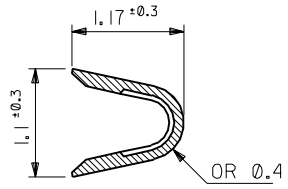

SECT. Z-Z

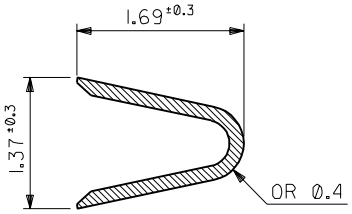

SECT. Y-Y

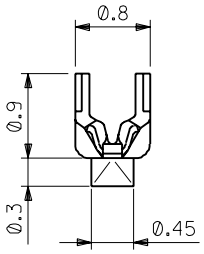

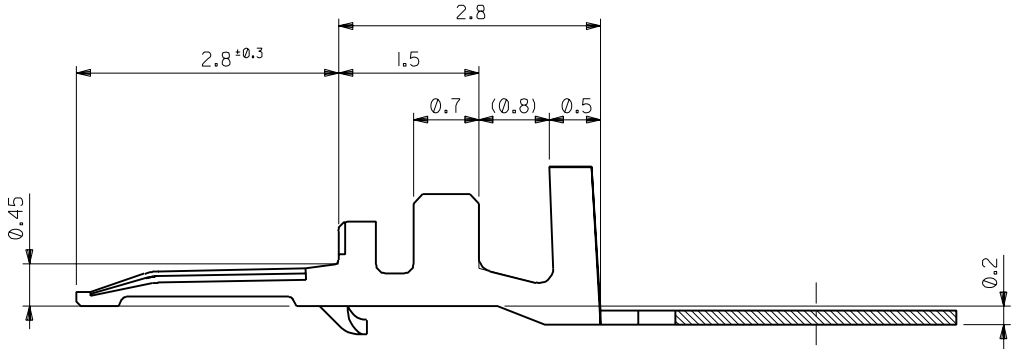

50080-8100	バラ状 LOOSE
50080-8000	連鎖状 CHAIN
ENG. NO.	端子形状 FORM

注記
NOTES

1. 適合ハウジング：5102 2シリーズ
   APPLICABLE HOUSING : 5102 2 SERIES
2. メッキ仕様　PLATING
   錫 0.9μm MIN. リフロー処理（前メッキ）
   TIN 0.9μm MIN. REFLOW TREATMENT (PRE-PLATED)

角度 ANGLE	±3°					
30 以上 OVER	±0.3					
10 以上 30 未満 OVER UNDER	±0.25	C	変更 REVISED	(J30697)	H.H M.F	'93/7/12
10 未満 UNDER	±0.2	B	変更&再作図 REVISED & REDRAWN	(J20810)	H.H M.F	'92/10/27
一般公差 GENERAL TOLERANCES		記号 LTR	変更内容 REVISION RECORD		DR. CHK.	日付 DATE

材料 MATERIAL　リン青銅 PHOSPHOR BRONZE (t=0.15)

仕上げ FINISH　—||—

適用電線範囲 WIRE RANGE　AWG #26-28

被覆外径 INS. RANGE　Ø 0.5-1.0

DRAWN BY '92/10/22 H.HIRAMOTO　CHK'D BY '93/7/12 H.HIRAMOTO

APP'D BY '93/7/13 M.FUKUSHIMA　尺度 SCALE 20 - 1

molex MOLEX-JAPAN CO.,LTD. 日本モレックス株式会社

REVISE ONLY ON CAD SYSTEM

TITLE 名称
1.25 BOARD IN CRIMP TERMINAL

DWG. NO. SD-50080-8*00　REV C

50080.S02

:MM DIMENSIONS IN METRIC DO NOT SCALE DRAWING

THIS DRAWING CONTAINS INFORMATION THAT IS PROPRIETARY TO MOLEX(JAPAN) AND SHOULD NOT BE USED WITHOUT WRITTEN PERMISSION
本図面は日本モレックス（株）の所有する情報を含むもので当社の許可なく複製を禁止する。

EN-01C(032)MXJ-32