Chipsmall Limited consists of a professional team with an average of over 10 year of expertise in the distribution of electronic components. Based in Hongkong, we have already established firm and mutual-benefit business relationships with customers from,Europe,America and south Asia,supplying obsolete and hard-to-find components to meet their specific needs.

With the principle of “Quality Parts,Customers Priority,Honest Operation,and Considerate Service”,our business mainly focus on the distribution of electronic components. Line cards we deal with include Microchip,ALPS,ROHM,Xilinx,Pulse,ON,Everlight and Freescale. Main products comprise IC,Modules,Potentiometer,IC Socket,Relay,Connector.Our parts cover such applications as commercial,industrial, and automotives areas.

We are looking forward to setting up business relationship with you and hope to provide you with the best service and solution. Let us make a better world for our industry!

Contact us

Tel: +86-755-8981 8866 Fax: +86-755-8427 6832
Email & Skype: info@chipsmall.com Web: www.chipsmall.com
Address: A1208, Overseas Decoration Building, #122 Zhenhua RD., Futian, Shenzhen, China

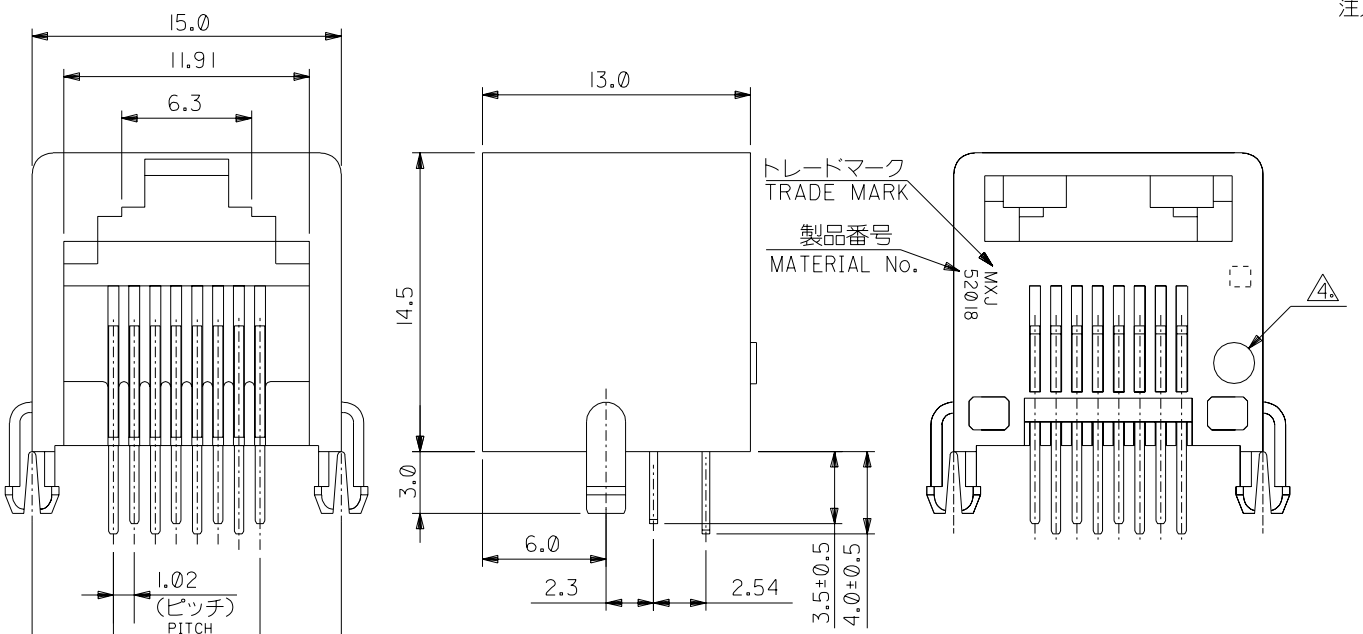

注）NOTES

1. 材質 MATERIAL
   ハウジング：ガラス入リポリエステル UL94V−0
   HSG. :POLYESTER G.F.15% UL94V-0
   ターミナル：リン青銅
   TERM.:PHOSPHOR BRONZE
2. メッキ仕様 PLATING
   接点部 ：金メッキ、表参照
   CONTACT AREA: GOLD PER TABLE
   半田付け部：錫メッキ 1.0μmMIN.
   SOLDER AREA : TIN 1.0 μm MIN.
   下地メッキ：ニッケルメッキ 1.0μmMIN.
   UNDERPLATE : NICKEL 1.0μmMIN.
3. 推奨基板厚：t＝1.6±0.05
   RECOMMENDED P.C.B. THICKNESS: 1.6±0.05

4. 金メッキ厚標示
   COLOR CODING TO INDICATE GOLD PLATING
   黄色：0.1μmMIN. 緑色：0.38μmMIN.
   YELLOW : 0.1 μmMIN. GREEN : 0.38 μmMIN.
   オレンジ色：0.76μmMIN. 無色：1.27μmMIN.
   ORANGE : 0.76 μmMIN. UNMARKED: 1.27 μmMIN.
5. ハウジングの色は、グレイ。
   HOUSING COLOR IS GRAY.

6. 公差非累積。
   NON-ACCUMULATIVE
7. 本製品は 52018-8**5 の鉛フリー品である。
   THIS PRODUCT IS LEAD FREE OF 52018-8**5.

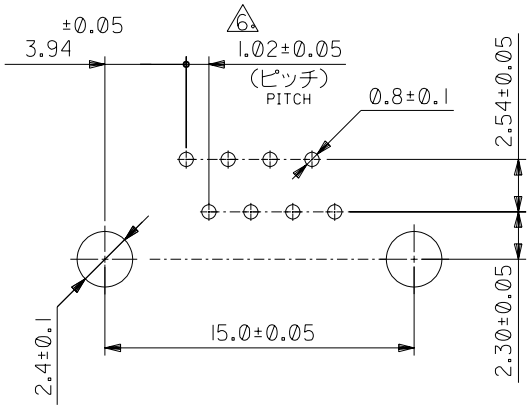

後番号 −88＊6に適用
MATERIAL NO. SUFFIX -88*6

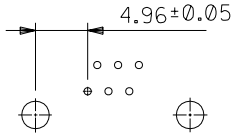

後番号 −86＊6に適用
MATERIAL NO. SUFFIX -86*6

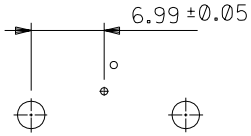

後番号 −82＊6に適用
MATERIAL NO. SUFFIX -82*6

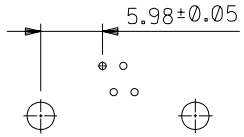

後番号 −84＊6に適用
MATERIAL NO. SUFFIX -84*6

基板穴推奨寸法
RECOMMENDED P.C.B. LAYOUT
(ジャック取付け側)
(JACK ASS'Y SIDE)

52018-8**6 MODEL NO.	ポジション POSITION	極数 CIRCUITS	(A)	金メッキ厚(μmMIN.) GOLD PLATING THK(MIN.)(μmMIN.)	製品番号 MATERIAL No.
8	8	7.11		1.27	52018-8846
				0.76	-8836
				0.38	-8826
				0.1	-8816
	6	5.08		1.27	-8646
	4	3.05		1.27	-8446
	2	1.02		1.27	52018-8246

角度 ANGLE	±3°				
30 以上 OVER	±0.3				
10 以上 30 未満 OVER UNDER	±0.25	0	新規作成 RELEASED (J2004-4035)	M.N M.S	04/04/28
10 未満 UNDER	±0.2	記号 LTR	変更内容 REVISION RECORD	DR. CHK.	日付 DATE
一般公差 GENERAL TOLERANCES		REVISE ONLY ON CAD SYSTEM			

材料 MATERIAL: 注参照 SEE NOTES
仕上げ FINISH: 注及び表参照 SEE NOTES AND CHART
適用電線範囲 WIRE RANGE: —#—
被覆外径 INS. RANGE: —#—
DRAWN BY '04/04/28 M.NABEI
CHK'D BY '04/04/28 K.TOJO
APP'D BY '04/04/28 M.SASAO
尺度 SCALE 4 - 1

MOLEX-JAPAN CO.,LTD.
日本モレックス株式会社

EDP. NO. —#—
ENG. NO. SD-52018-001
REV 0
TITLE 名称
MODULAR JACK
HOUSING ASS'Y -LEAD FREE-

ENG. NO SD-52018-001
EDP NO. —#—
:MM DIMENSIONS IN METRIC DO NOT SCALE DRAWING

THIS DRAWING CONTAINS INFORMATION THAT IS PROPRIETARY TO MOLEX(JAPAN) AND SHOULD NOT BE USED WITHOUT WRITTEN PERMISSION
本図面は日本モレックス（株）の所有する情報を含むもので当社の許可なく複製を禁止する。