Chipsmall Limited consists of a professional team with an average of over 10 year of expertise in the distribution of electronic components. Based in Hongkong, we have already established firm and mutual-benefit business relationships with customers from,Europe,America and south Asia,supplying obsolete and hard-to-find components to meet their specific needs.

With the principle of “Quality Parts,Customers Priority,Honest Operation,and Considerate Service”,our business mainly focus on the distribution of electronic components. Line cards we deal with include Microchip,ALPS,ROHM,Xilinx,Pulse,ON,Everlight and Freescale. Main products comprise IC,Modules,Potentiometer,IC Socket,Relay,Connector.Our parts cover such applications as commercial,industrial, and automotives areas.

We are looking forward to setting up business relationship with you and hope to provide you with the best service and solution. Let us make a better world for our industry!

Contact us

Tel: +86-755-8981 8866 Fax: +86-755-8427 6832
Email & Skype: info@chipsmall.com Web: www.chipsmall.com
Address: A1208, Overseas Decoration Building, #122 Zhenhua RD., Futian, Shenzhen, China

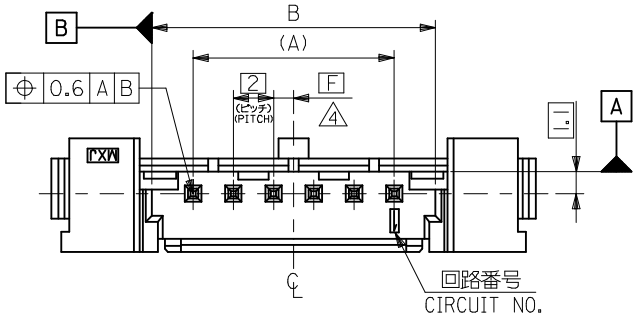

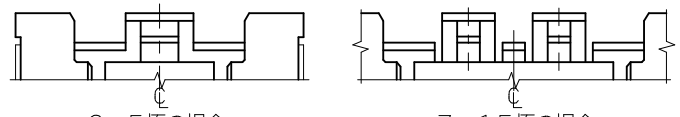

DETAIL G

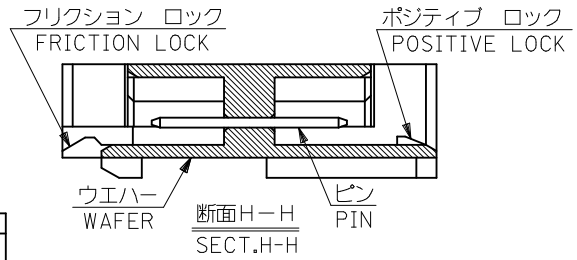

断面H－H
SECT.H-H

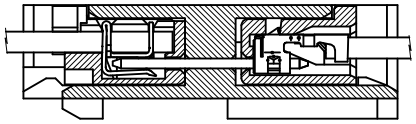

嵌合状態図
CROSS-SECTION OF MATED CONNECTORS

注 記
NOTES

1. 材料 MATERIAL
   ウエハー：PBT,UL94V-0
   WAFER ：PBT,UL94V-0
   ピン ：黄銅、スズメッキ(□0.5)
   PIN ：BRASS,TIN PLATED (0.5 SQUARE)
2. 適合圧着ハウジング ：51090-**00
   MATING CRIMP RECEPTACLE HOUSING:51090-**00
3. 適合圧接ハウジング ：52484-**1*
   MATING IDT RECEPTACLE HOUSING:52484-**1*
4. B寸法の℄から、隣接するピンの℄までの位置を示す。
   THIS DIMENSION SHOWS SPACING BETWEEN CENTER OF PIN AND CENTER OF B DIMENSION.
5. 本図は、6極を示す。
   6 CIRCUIT VERSION IS SHOWN IN THIS DRAWING.
6. ハウジングは、パネル打抜き側から挿入すること。
   INSERT HOUSING FROM PUNCH SIDE OF PANEL.
7. 色 COLOR
   53358-**40：自然色 (WHITE)
   53358-**42：赤色 (RED)
   53358-**43：黄色 (YELLOW)
   53358-**44：青色 (BLUE)

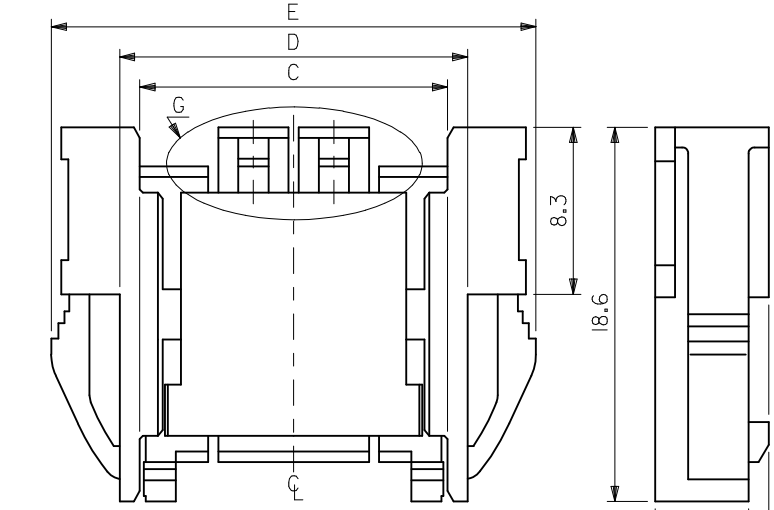

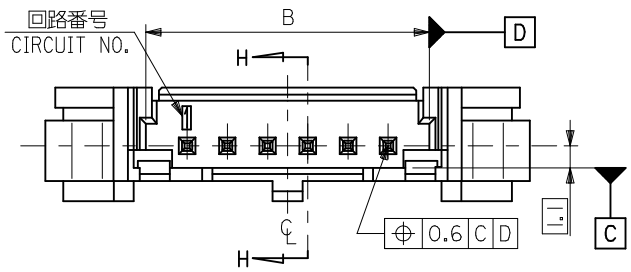

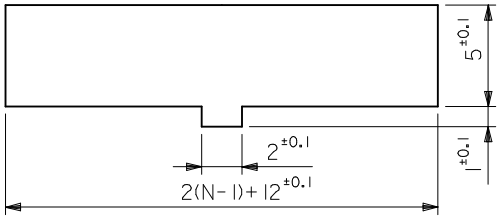

参考パネルスロット寸法
PANEL SLOT DIM.(REF.)
(パネル厚：0．8～2．0)
(THICKNESS ：0.8-2.0)

無 鉛
LEAD FREE

F	E	D	C	B	A	ENG. NO.	CKT.
2	42.1	35.3	33.3	32.1	28	53358-154*	15
1	40.1	33.3	31.3	30.1	26	-144*	14
2	38.1	31.3	29.3	28.1	24	-134*	13
1	36.1	29.3	27.3	26.1	22	-124*	12
2	34.1	27.3	25.3	24.1	20	-114*	11
1	32.1	25.3	23.3	22.1	18	-104*	10
2	30.1	23.3	21.3	20.1	16	-094*	9
1	28.1	21.3	19.3	18.1	14	-084*	8
2	26.1	19.3	17.3	16.1	12	-074*	7
1	24.1	17.3	15.3	14.1	10	-064*	6
2	22.1	15.3	13.3	12.1	8	-054*	5
1	20.1	13.3	11.3	10.1	6	-044*	4
2	18.1	11.3	9.3	8.1	4	-034*	3
1	16.1	9.3	7.3	6.1	2	53358-024*	2

REVISED
EC NO: J2015-0419
DRWN:KMATSUYAMA 2014/09/26
CH'KD:KASAKAWA 2014/09/29
APPR:NUKITA 2014/11/11
DESCRIPTION
REV B

GENERAL TOLERANCES (UNLESS SPECIFIED)

10 UNDER	±0.2
10 OVER 30 UNDER	±0.25
30 OVER	±0.3
ANGULAR	±3 °

DRAFT WHERE APPLICABLE MUST REMAIN WITHIN DIMENSIONS

DIMENSION STYLE: MM ONLY
SCALE: ---
DESIGN UNITS: METRIC
THIRD ANGLE PROJECTION

DRAWN BY SSHIBATA	DATE 2012/11/21	TITLE 2.0 WIRE TO WIRE CONN. PANEL MOUNT WAFER ASSY
CHECKED BY JMIYAZAWA	DATE 2012/11/21	
APPROVED BY YOITO	DATE 2012/11/21	molex
MATERIAL NO. SEE CHART	DOCUMENT NO. SD-53358-001	SHEET NO. 1 OF 1

SIZE A3

THIS DRAWING CONTAINS INFORMATION THAT IS PROPRIETARY TO MOLEX INCORPORATED AND SHOULD NOT BE USED WITHOUT WRITTEN PERMISSION