Chipsmall Limited consists of a professional team with an average of over 10 year of expertise in the distribution of electronic components. Based in Hongkong, we have already established firm and mutual-benefit business relationships with customers from,Europe,America and south Asia,supplying obsolete and hard-to-find components to meet their specific needs.

With the principle of “Quality Parts,Customers Priority,Honest Operation,and Considerate Service”,our business mainly focus on the distribution of electronic components. Line cards we deal with include Microchip,ALPS,ROHM,Xilinx,Pulse,ON,Everlight and Freescale. Main products comprise IC,Modules,Potentiometer,IC Socket,Relay,Connector.Our parts cover such applications as commercial,industrial, and automotives areas.

We are looking forward to setting up business relationship with you and hope to provide you with the best service and solution. Let us make a better world for our industry!

Contact us

Tel: +86-755-8981 8866 Fax: +86-755-8427 6832
Email & Skype: info@chipsmall.com Web: www.chipsmall.com
Address: A1208, Overseas Decoration Building, #122 Zhenhua RD., Futian, Shenzhen, China

DWG. NO. SD-53984-003

部品名 PARTS NAME	材質 MATERIAL	注記 NOTES
ウエハー WAFER	ガラス入り46ナイロン NYLON46 G.F.	G.F.30%, UL94V-0, 色：黒 G.F.30%, UL94V-0, COLOR : BLACK
ピン PIN	黄銅 t0.25 BRASS t0.25	接点部 ：金メッキ0.76μmMIN. CONTACT AREA : GOLD 0.76 μmMIN. 半田付け部：錫メッキ1μmMIN. SOLDERTAIL AREA : TIN 1μmMIN. 下地メッキ：ニッケルメッキ2μmMIN. UNDER-PLATING : NICKEL 2 μmMIN.
シエル SHELL	りん青銅 t0.4 PHOSPHOR BRONZE t0.4	錫メッキ：1μmMIN. TIN : 1μmMIN. 下地メッキ：ニッケルメッキ0.5μmMIN. UNDER-PLATING : NICKEL 0.5 μmMIN.

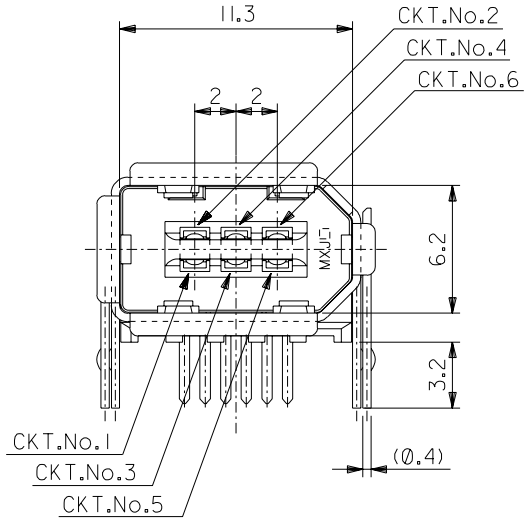

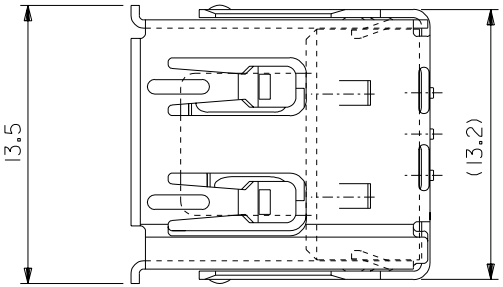

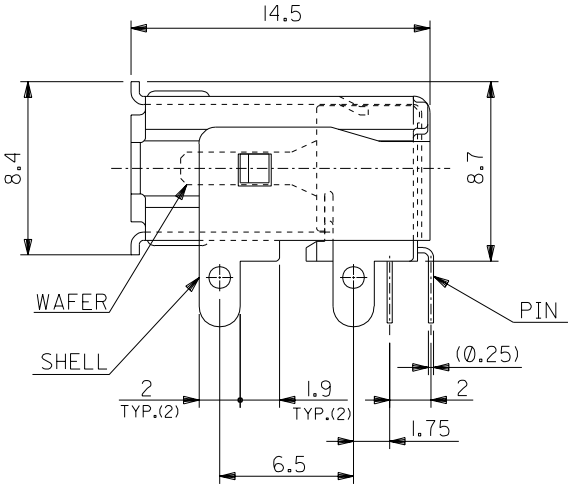

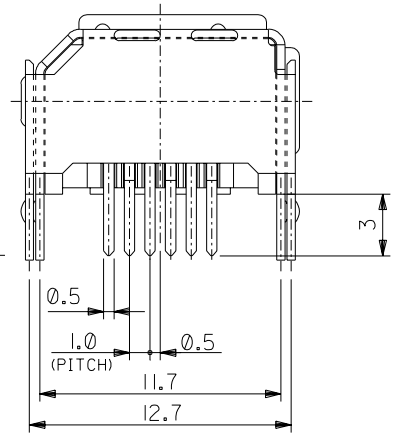

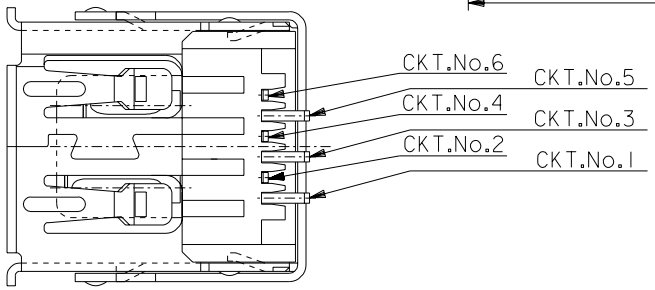

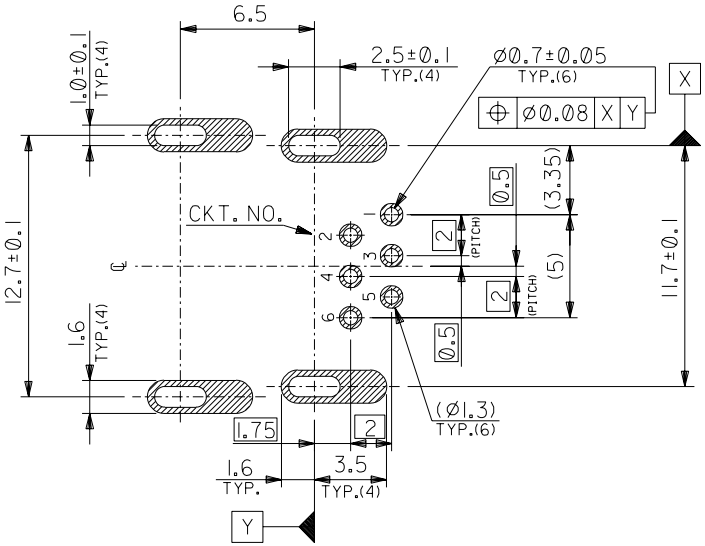

P.C. BOARD HOLE DIM.
(COMPONENT SIDE)

角度 ANGLE	±3°					
30以上 OVER	±0.3					
10以上 30未満 OVER UNDER	±0.25					
10未満 UNDER	±0.2	0	新規作成 RELEASED (J2004-3680)	Y.S.	M.S	'04/04/08
一般公差 GENERAL TOLERANCES		記号 LTR	変更内容 REVISION RECORD	DR. CHK.		日付 DATE

材料 MATERIAL 表参照 SEE TABLE

仕上げ FINISH 表参照 SEE TABLE

適用電線範囲 WIRE RANGE —#—

被覆外径 INS. RANGE —#—

DRAWN BY '04/4/8 Y.Sakuyama

CHK'D BY '04/4/8 H. Sasao

APP'D BY '04/4/8 H. Sasao

尺度 SCALE 4 : 1

53984-0671	MATERIAL NO.
53984-**71	MODEL NO.

MOLEX-JAPAN CO.,LTD. 日本モレックス株式会社

REVISE ONLY ON CAD SYSTEM

TITLE 名称
2.0 I/O CONN. SOCKET
RIGHT-ANGLE FLAT DIP
-LEAD FREE-

DWG. NO. SD-53984-003 REV 0

:MM DIMENSIONS IN METRIC DO NOT SCALE DRAWING

THIS DRAWING CONTAINS INFORMATION THAT IS PROPRIETARY TO MOLEX(JAPAN) AND SHOULD NOT BE USED WITHOUT WRITTEN PERMISSION
本図面は日本モレックス（株）の所有する情報を含むもので当社の許可なく複製を禁止する。

EN-0IC(032)MXJ-32

SD-53984-003.S01