Chipsmall Limited consists of a professional team with an average of over 10 year of expertise in the distribution of electronic components. Based in Hongkong, we have already established firm and mutual-benefit business relationships with customers from,Europe,America and south Asia,supplying obsolete and hard-to-find components to meet their specific needs.

With the principle of “Quality Parts,Customers Priority,Honest Operation,and Considerate Service”,our business mainly focus on the distribution of electronic components. Line cards we deal with include Microchip,ALPS,ROHM,Xilinx,Pulse,ON,Everlight and Freescale. Main products comprise IC,Modules,Potentiometer,IC Socket,Relay,Connector.Our parts cover such applications as commercial,industrial, and automotives areas.

We are looking forward to setting up business relationship with you and hope to provide you with the best service and solution. Let us make a better world for our industry!

# Contact us

Tel: +86-755-8981 8866 Fax: +86-755-8427 6832
Email & Skype: info@chipsmall.com Web: www.chipsmall.com
Address: A1208, Overseas Decoration Building, #122 Zhenhua RD., Futian, Shenzhen, China

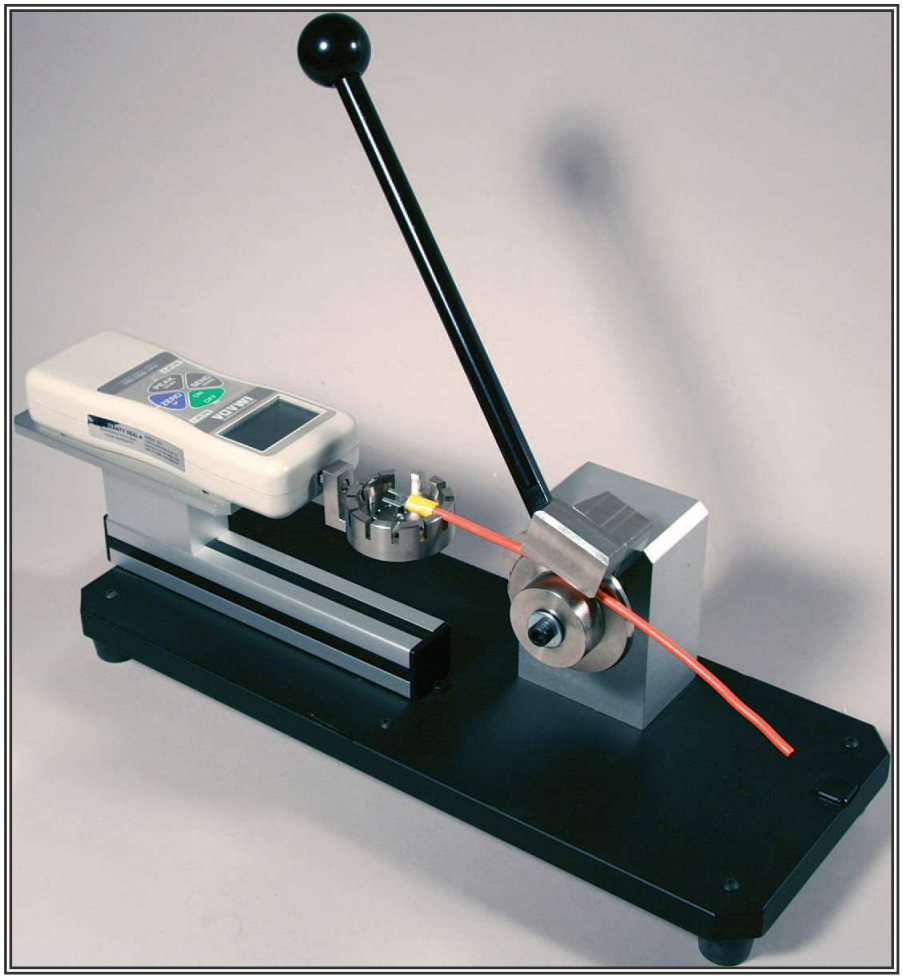

# PT-1500
# Auto Grip Pull Tester
# Operation Manual
# Order No. 63801-9100

- Description
- Operation
- Maintenance

# WARNING

**NEVER** OPERATE, SERVICE, INSTALL, OR ADJUST THIS PULL TESTER WITHOUT PROPER INSTRUCTION AND WITHOUT FIRST READING AND UNDERSTANDING THE INSTRUCTIONS IN THIS MANUAL.

**NEVER** REGARDLESS OF WHETHER THE DISPLAY MODULE (FORCE GAUGE) IS ON OR OFF, DO NOT EXCEED THE CAPACITY OF THE DISPLAY MODULE. AT 230 LBF (105 kgf), THE DISPLAY WILL FLASH. NEVER EXCEED THE MAXIMUM CAPACITY OF 440 LBF (200 kgf), OR THE LOAD CELL WILL BE DAMAGED. AVOID SHOCK LOAD.

**WARNING!** FAILURE TO ALLOW FOR SUFFICIENT OVERLOAD CAPACITY IN THE LOAD, STRUCTURE AND MOUNTING ELEMENTS, MAY RESULT IN PROPERTY DAMAGE, SERIOUS INJURY, AND EVEN DEATH.

**CAUTION** When mounting display module, after recalibration or repair, use M4 mounting screws with a maximum insertion depth of 5mm into the display module. Only use mounting hardware supplied.

**CAUTION** Hand tighten wire terminal grip only. Do not use tools.

**CAUTION** Do not remove the warranty seal or disassemble the display module. Disassembly will void the warranty.

**CAUTION** Molex crimp specifications are valid only when used with Molex terminals, terminators and tooling.

**CAUTION** Specifications subject to change without notice.

**CAUTION** Always wear safety glasses.

## WORK SAFELY AT ALL TIMES

## For Service, Contact Your Local Molex Sales Office

**Molex Application Tooling Group**
**2200 Wellington Court**
**Lisle, Illinois 60532, USA**
**Tel: 630-969-4550**
**Fax: 630-505-0049**

# Table of Contents

## SECTION

1 General Description

2 Setup and Operation

3 Maintenance

# Section 1

## General Description

1.1 Description

1.2 Features

1.3 Technical Specifications

1.4 Delivery Check

1.5 Tools

# General Description

## 1.1. Description

The PT-1500 Auto Grip Pull Tester, order no. 63801-9100, is a manual, lever-operated digital pull tester for checking pull strength of crimped terminals. The tester is designed to automatically grip the wire as the hand lever is pulled down.

The unit is complete with display module, two multi-terminal grips, pull tester frame, and an AC adapter/charger for the display module. It has a 3-point, NIST certification.

**Principal Mechanical Parts of the Auto Grip Pull Tester**
See Figure 1-1

1. 63801-9100 PT-1500 Pull Tester assembly
2. 63801-9101 Multi-terminal grip
3. 63801-9102 Clamp type terminal grip
4. 63801-9103 A.C. adapter / charger, 120 VAC
   63801-9105 A.C. adapter / charger, 230 VAC
5. 63801-9104 Display module

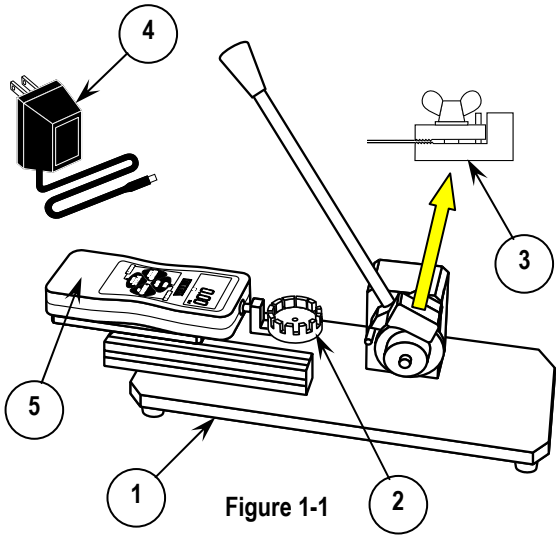

Figure 1-1

## 1.2. Features

- Single-stroke, ergonomic pull-down motion
- Automatically grips sample wire as lever is pulled
- Grips wire diameters up to 0.23" (8-30 AWG)
- Lbf, kgf, and Newton units are push-button selectable
- Digimatic and analog outputs
- Display module is easily removed for recalibration or repair
- Runs on internal rechargeable batteries or AC adapter (120 or 230 VAC)
- NIST Calibration Certificate included

## 1.3. Technical Specification

**Dimensions** See Figure 1-2

| | | |
|---|---|---|
| Width: | 475.0 to 5.45.0mm | (18.70 to 21.45") |
| | (Depending on the handle position) | |
| Depth: | 150.00mm | (5.90") |
| Height: | 400.0mm | (15.74") |

**Weight**
10.88kg (24 lbs)

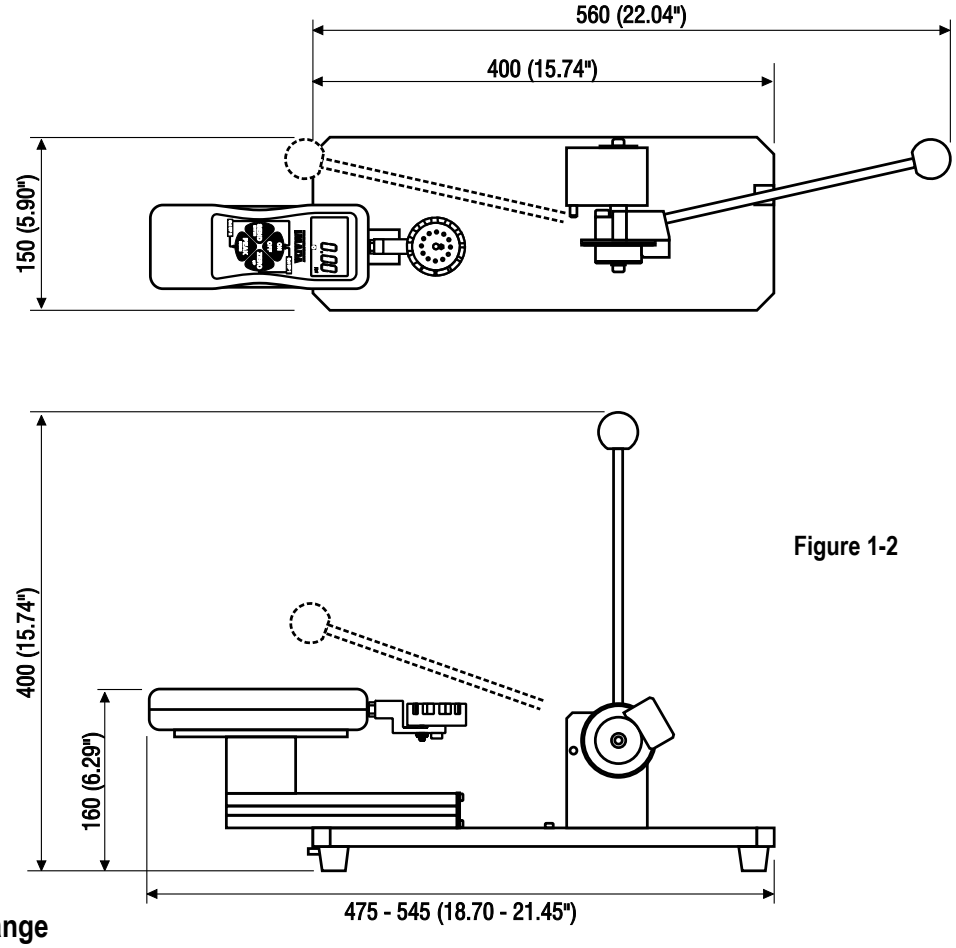


Figure 1-2

**63801-9100 Range**
(Resolution) ± 0.2% F.S. ± 1 LSD

| Model | Capacity (Resolution) | | |
|---|---|---|---|
| | Pound-force | Kilogram-force | Newtons |
| 63801-9100 | 220.0 (0.1 lbf) | 100.0 (0.1 kgf) | 1000 (1 N) |

## 1.4. Delivery Check

Carefully remove the assembly from its shipping container and determine that the following items are included in the package.

| Description | Quantity |
|---|---|
| 63801-9100 Pull Tester assembly | 1 |
| 63801-9102 Clamp type terminal grip | 1 |
| 63801-9103 A.C. Adapter / charger (120 VAC) or | 1 |
| 63801-9105 A.C. Adapter / charger (230 VAC) | 1 |
| TM-638019100 Operation Manual | 1 |

## 1.5. Tools

The following tools are recommended for set up and maintaining the tester:

- ✓ Open end wrench, 10mm
- ✓ Hex wrench, 5mm

# Section 2

## Set-Up and Operation

2.1 Display Module Operation

2.2 LCD Display

2.3 Installation

2.4 General Operation

2.5 Removing the Display Module

2.6 Settings and Functions

Read the following instructions before attempting to operate the Auto Grip Pull Tester.

## 2.1. Display Module Operation

See Figure 2-1.

**Display**

To set the measurement units to pound-force (lbf), kilogram-force (kgf), or Newtons (N), follow the steps below:

1. Turn off the display module.
2. Then set the display units by pressing and holding the ZERO button until the desired measuring unit is displayed.
3. Press the ON/OFF button.
4. Then press the ZERO button to cycle the units.
5. Push the SEND button to select.
6. The newly selected units will stay as the default.

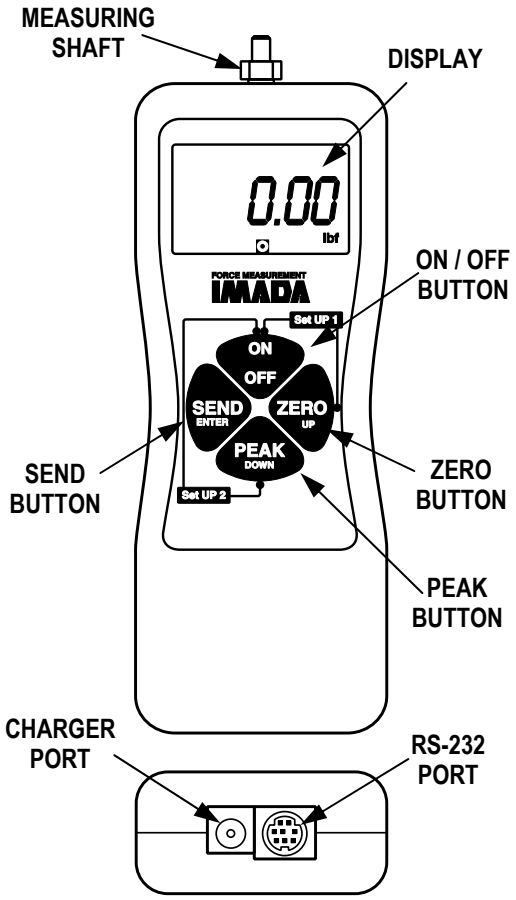


Figure 2-1

**On / Off Button**

Power ON, capacity is displayed. After 10 minutes, unit powers down if no key is pressed.

**Peak Button**

Press to activate the Peak mode.

**Send Button**

Transmits display value.

**Zero Button**

Tares weight of attachment and resets peak value.

**Measuring Shaft**

Attach any of the included standard attachments or optional special attachments to measure tension.

**Charger Port**

Recharge the internal NiMH battery or connect directly to an AC power supply by using one of the included AC charger / adapters, appropriate for your local electrical requirements. (See Figure 1.1).

**RS-232 Port**

For data transmission to the external device.

## 2.2 LCD Display

See figure 2-2.

**Compression Icon**

Indicates the compression measurement.

**Tension Icon**
Indicates the tension measurement, (used for crimp pulls).

**Unit Indicator**
Displays selected measuring unit. Display pound-force (lbf), kilogram-force (kgf) or Newtons (N).

**Battery Icon**
Flashes when gauge needs to be recharged.

**GO/NO GO Indicator**
- -- Under low set point
- ○ Between low and high set point
- ✚ Over high set point

**Negative Sign**
Will displayed when measuring tension.

**Peak Icon**
Will displays continuously when peak mode is active.

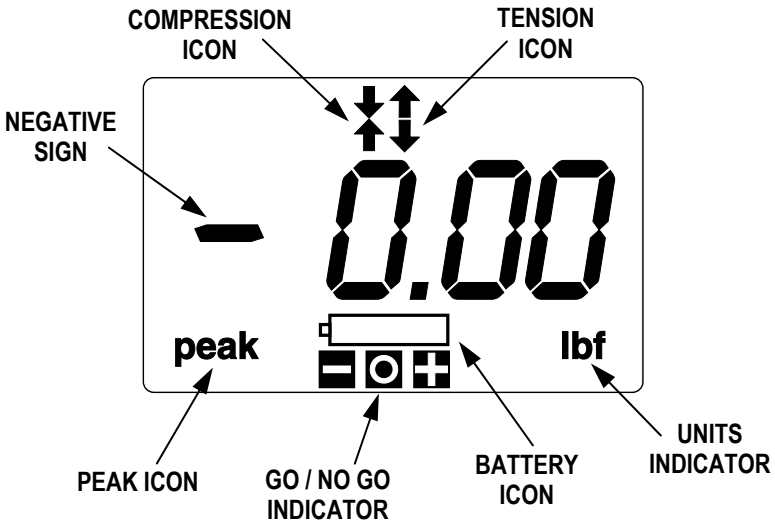


Figure 2-2

## 2.3 Installation (See Figure 2-3)

1. Place the Auto grip Pull Tester securely on a stable work surface.
2. To adjust clearance between the two wire gripping fixtures if necessary, loosen the cap screw on the display-module mounting bracket. Adjust the position and the re-tighten the cap screw.
3. To remove the grip, use a 10mm open-end wrench to hold the hex nut while turning the grip counter-clockwise (CW). Installation is the reverse of removal but do not over tighten the grip on the display module.
4. Connect the appropriate AC adapter (120 or 230 VAC included) to the display module and plug it into an AC outlet or use the internal rechargeable battery.

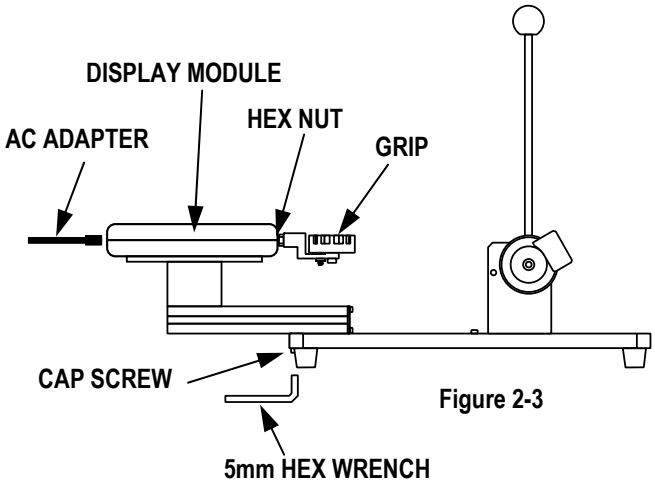


Figure 2-3

## 2.4 General Operation (See figure 2-4)

1. Press the **ON/OFF** button to turn on the display module on, press the **PEAK** button to enter the peak measuring mode.
2. If using the ring wire terminal grip, turn the turret to select an appropriate aperture and bring the hand lever forward. See Figure A.
3. Insert the sample so that the wire terminal is held in place by the grip. If necessary, press the **ZERO** button to reset. See Figure B.

4. Thread the wire between the gripper and the cylinder which is attached to the end of the hand lever. See Figure C.
5. Slowly pull the hand lever back to automatically grip the wire and pull off the terminal. See Figure D.

   **NOTE**: Pull the lever slowly and steadily to insure consistent readings.

6. Read the result from the display module and press the **ZERO** button to reset for the next test.

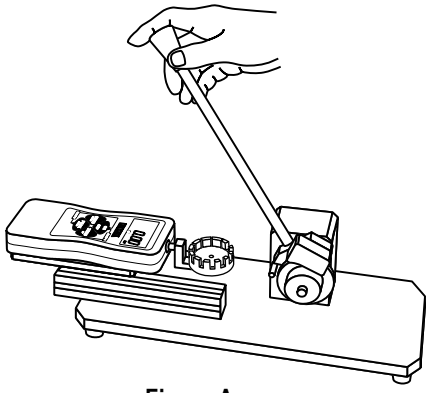

**Figure A**

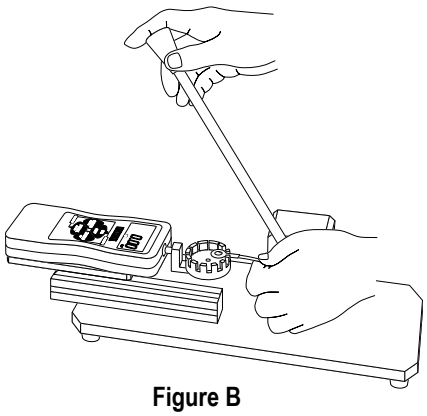

**Figure B**

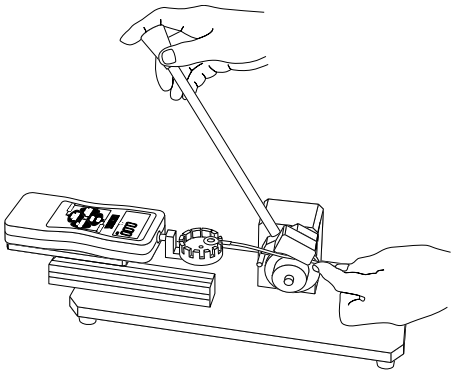

**Figure C**

**Figure 2-4**

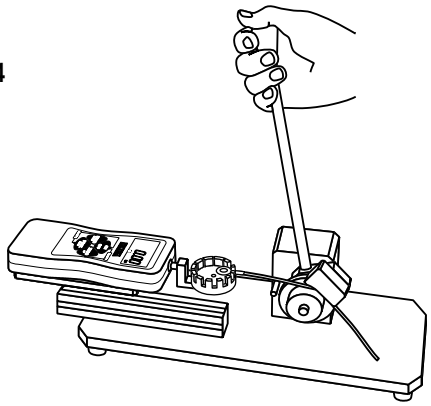

**Figure D**

## 2.5 Removing the Display Module

(See Figure 2-5)

The display module can be easily removed for recalibration or repair. To do this:

1. Loosen the cap screw on the display module mounting bracket and slide the mounting bracket off the base.
   Remove the (4) M4 Phillips screws from the back of the mounting plate.
2. Remove the display module.

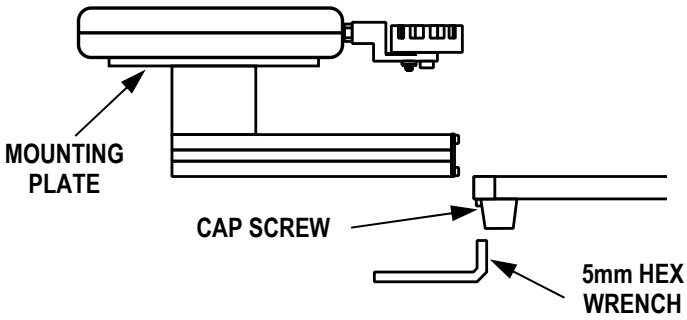


**Figure 2-5**

## 2.6 Settings and Functions

**RS-232C Bi-directional Interface Functions** (See Chart below)
Connect the gauge to an external data receiving device, with the optional RS-232C cable (Order No. 63801-9151). See Optional Cables and Software below.
All gauge functions can be duplicated from a remote location by using the RS-232C interface.
All commands must be sent in uppercase ASCII character format followed by [Enter].
Signal level: RS-232C, 8 data bits, 1 stop bit, and no parity bit.
Baud rate: 19200 bps.

| RS-232C Interface Functions (Upper case ASCII format) | | |
|---|---|---|
| **Command** | **Function** | **Response*** |
| K [Enter] | Select "kgf/gf" units | R [Enter] executed E [Enter] error* |
| N [Enter] | Select "N" units | |
| O [Enter] | Select "lbf/ozf" units | |
| P [Enter] | Select peak mode | |
| T [Enter] | Select real time mode | |
| Z [Enter] | Tare Display | |
| Q [Enter] | Turn off power | |
| EHHHHLLLL [Enter]** | Set high/low set points(4 digit) HHHH=High, LLLL=Low | |
| E [Enter]** | Read high/low set points | EHHHHLLLL [Enter]**<br>set point values (4 digit)<br>HHHH=High, LLLL=Low |
| D [Enter] | Transmit display data | [value][units][mode][Enter] |
| *E [Enter] response if the command is not accepted.<br>**Ignore decimal point for high low set points | | |

### Optional Cables and Software

To capture and analyze the peak data from the force gauge. A running log of all the data is displayed along with a chart. Calculate max/min, average, and standard deviation.

| Order No. | Description | Type |
|---|---|---|
| 63901-9150 | Software, Data Acquisition. | |
| 63801-9151 | RS-232C cable (10', 9 pin female) | 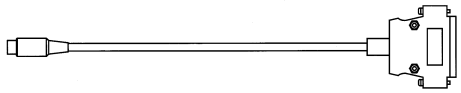 |
| 63801-9152 | RS-232C to USB Adapter | |

### Recharging NI-MH Battery

1. To maximize the life of the battery, power is shut off after 10 minutes of non-use. Automatic shut off is bypassed when used with the AC adapter/charger.
2. Battery icon will flash when the gauge needs to be recharged.
3. Turn off power. Only use one of the AC adapter / chargers provided, 63801-9103 for 120VAC, 63801-9105 for 230VAC. Plug into the correct AC output. It takes 10 hours to charge fully.
4. When the gauge is turned off, make sure the AC adapter/charger is disconnected to avoid overcharging.

# Section 3

## Maintenance

3.1 Cleaning

3.2 Calibration

## 3.1 Cleaning

**CAUTION**: Always disconnect power supply before all maintenance

The Auto Grip Pull Tester maintenance will increase instrument life and produce a consistent, crimp strength measurement capability. The following procedure should be followed at the end of each operation.

1. Always disconnect the power supply from this tool when not in use.
2. For efficient operation, the Auto Grip Pull Tester should be cleaned daily. Use a soft bristle brush to remove debris from critical areas such as the terminal grip and clamp.

## 3.2. Calibration

The display module should be calibrated on a regular schedule (usually annually). Molex does not offer a Calibration service for the display module. A local calibration service should be used.

# For more information use the Quality Crimping Handbook

## And Industrial Crimping Handbook

There is no charge for these books, they can be found on the Molex Website (www.molex.com) or contact you local Molex sales engineer

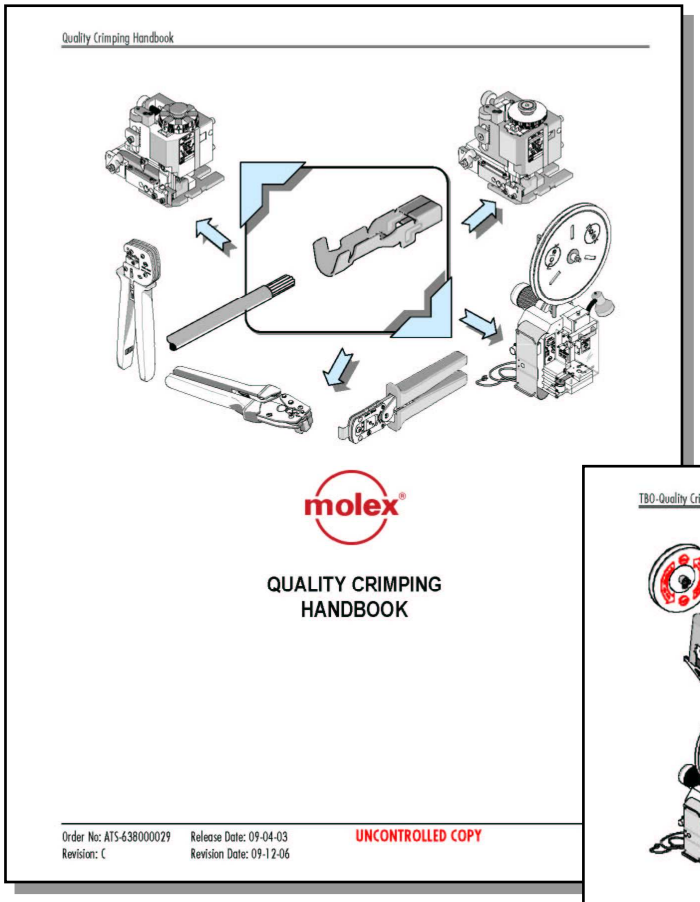


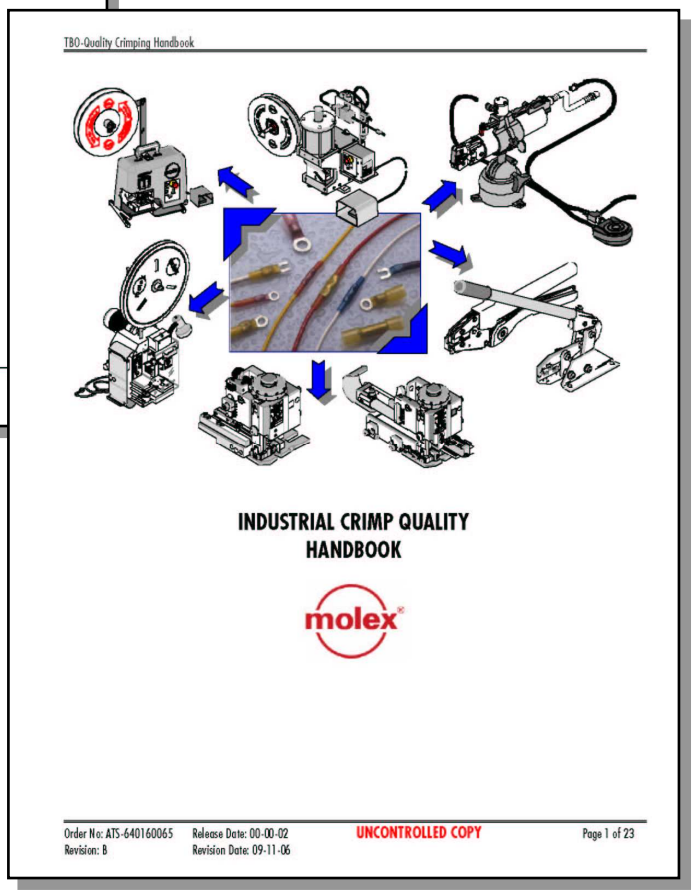

## 2 YEAR WARRANTY

(RESTRICTIONS APPLY)

Molex warrants its products to the original purchaser to be free from defects in workmanship and material under normal use and proper maintenance for two years (one year for adapters, attachments, batteries, and cables) from original purchase. This warranty shall not be effective if the product has been subject to overload, shock load, misuse, negligence, accident, or repairs attempted by others than Molex.

During the warranty period, we will, at our option, either repair or replace defective products. Please call our customer service department for a return authorization number and return the defective product to us with freight prepaid.

The foregoing warranty constitutes the SOLE AND EXCLUSIVE WARRANTY, and we hereby disclaim all other warranties, express, statutory or implied, applicable to the products and/or software, including but not limited to all implied warranties of merchantability, fitness, non-infringement, results, accuracy, security and freedom from computer virus. In no event shall Molex be liable for any incidental, consequential or punitive damages in connection with the use of its products and/or software.

**CAUTION**: To prevent injury, wear eye protection when using this tool.

http://www.molex.com