Chipsmall Limited consists of a professional team with an average of over 10 year of expertise in the distribution of electronic components. Based in Hongkong, we have already established firm and mutual-benefit business relationships with customers from,Europe,America and south Asia,supplying obsolete and hard-to-find components to meet their specific needs.

With the principle of “Quality Parts,Customers Priority,Honest Operation,and Considerate Service”,our business mainly focus on the distribution of electronic components. Line cards we deal with include Microchip,ALPS,ROHM,Xilinx,Pulse,ON,Everlight and Freescale. Main products comprise IC,Modules,Potentiometer,IC Socket,Relay,Connector.Our parts cover such applications as commercial,industrial, and automotives areas.

We are looking forward to setting up business relationship with you and hope to provide you with the best service and solution. Let us make a better world for our industry!

Contact us

Tel: +86-755-8981 8866 Fax: +86-755-8427 6832
Email & Skype: info@chipsmall.com Web: www.chipsmall.com
Address: A1208, Overseas Decoration Building, #122 Zhenhua RD., Futian, Shenzhen, China

HAND CRIMP TOOL

molex

Application Tooling Specification Sheet

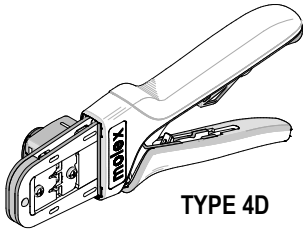

TYPE 4D

Order No. 63811-8700

FEATURES

- A full cycle ratcheting hand tool ensures complete crimps
- Ergonomic soft grip handles for comfortable crimping
- A precision user-friendly terminal locator wire stop holds terminals in the proper crimping position
- Right and Left handed applications
- This tool is IPC/WHMA A-620 Class 2 compliant
- This tool is RoHS compliant, however RoHS compliant is not required

SCOPE

Products: SL™ Crimp Terminal, 22-24 and 32-36 AWG.

Terminal Series No.	Terminal Order No.				Wire Size		✦Insulation Diameter		Strip Length	
	Loose Piece		✳Reel		AWG	mm²	mm	In.	mm	In.
50084	50084-8114	50084-8160	50084-8014	50084-8060	22-24	0.33-0.20	1.09-1.65	.043-.065	2.54-3.17	.100-.125
	50084-8129		50084-8029							
50088	50088-8114	50088-8160	50088-8014	50088-8060	22-24	0.33-0.20	1.09-1.65	.043-.065	2.54-3.17	.100-.125
	50088-8128		50088-8028							
70021	16-02-0114	40-08-0873	16-02-0081	16-02-0874	22-24	0.33-0.20	1.09-1.65	.043-.065	2.54-3.17	.100-.125
	16-02-0115	70021-0114	16-02-0093	16-02-0107						
	16-02-0117	70021-0117	16-02-0116	70021-0081						
	16-02-0111	16-02-0113	16-02-0079	16-02-0092	32-36	0.03-0.01	0.43-0.64	.017-.025	2.54-3.17	.100-.125
	16-02-0112		16-02-0080	16-02-0106						
70058	16-02-0102	70058-0102	16-02-0086	70058-0086	22-24	0.33-0.20	1.09-1.65	.043-.065	2.54-3.17	.100-.125
	16-02-0103	70058-0103	16-02-0087	70058-0087						
	16-02-0104	70058-0104	16-02-0088	70058-0088						
	16-02-0147	70058-4102	16-02-0131	70058-4086						
			16-02-0152	70058-5001						
	16-02-0099	16-02-0101	16-02-0074	16-02-0085	32-36	0.03-0.01	0.43-0.64	.017-.025	2.54-3.17	.100-.125
	16-02-0100	70058-0099	16-02-0084	70058-0084						
	16-02-0144	70058-4099	16-02-0143	70058-4084						
71851	16-02-1114	16-02-1125	16-02-1110	16-02-1124	22-24	0.33-0.20	1.09-1.65	.043-.065	2.54-3.17	.100-.125
	16-02-1115		16-02-1111							
	16-02-1119	16-02-1123	16-02-1118	16-02-1122	32-36	0.03-0.01	0.43-0.64	.017-.025	2.54-3.17	.100-.125
	16-02-1121		16-02-1120							

✳Follow the Cut-Off Tab specifications on Applicator specification sheets

✦**See Conditions on page 2.**

DEFINITION OF TERMS

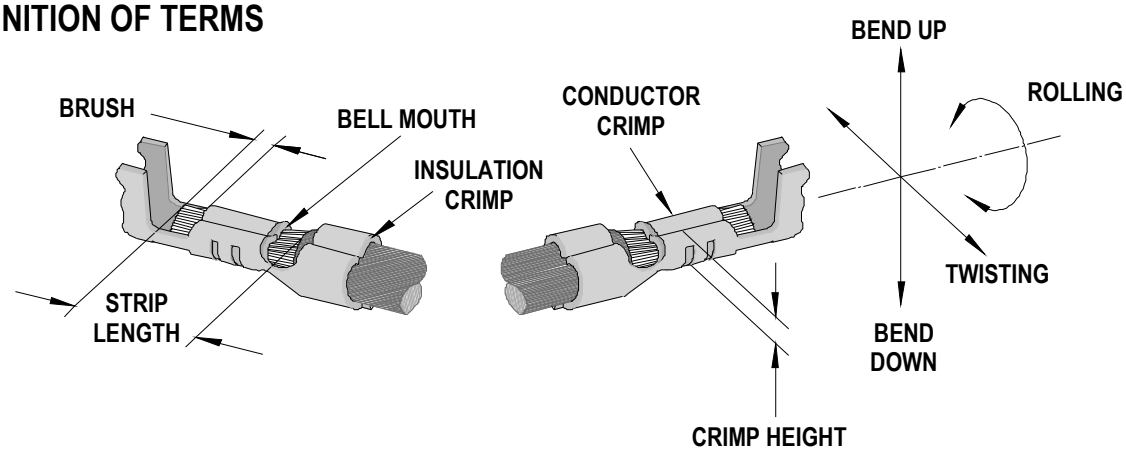

The above terminal drawing is a generic terminal representation. It is not an image of a terminal listed in the scope.

CONDITIONS:

After crimping, the conductor profiles should measure the following.

Terminal Series No	Wire Size		Conductor Crimp				Insulation Crimp				Pull Force Minimum		Profile	
			Height (Ref.)		Width (Ref.)		Height (Ref.)		Width (Ref.)					
	AWG	mm²	mm	In.	mm	In.	mm	In.	mm	In.	N	Lb.	22-24	32-36
50084	22	0.33	0.75-0.85	.030-.033	1.43	.056	1.70	.067	1.76	.069	39.2	8.82	X	
	24	0.20	0.75-0.85	.030-.033	1.43	.056	1.70	.067	1.76	.069	29.4	6.61	X	
	32	0.03	0.53-0.63	.021-.025	0.91	.036	0.95	.037	1.16	.046	4.4	1.00		X
	34	0.02	0.53-0.63	.021-.025	0.91	.036	0.95	.037	1.16	.046	2.6	0.60		X
	36	0.01	0.53-0.63	.021-.025	0.91	.036	0.95	.037	1.16	.046	1.8	0.40		X
50088	22	0.33	0.75-0.85	.030-.033	1.43	.056	1.70	.067	1.76	.069	39.2	8.82	X	
	24	0.20	0.75-0.85	.030-.033	1.43	.056	1.70	.067	1.76	.069	29.4	6.61	X	
	32	0.03	0.53-0.63	.021-.025	0.91	.036	0.95	.037	1.16	.046	4.4	1.00		X
	34	0.02	0.53-0.63	.021-.025	0.91	.036	0.95	.037	1.16	.046	2.6	0.60		X
	36	0.01	0.53-0.63	.021-.025	0.91	.036	0.95	.037	1.16	.046	1.8	0.40		X
70021	22	0.33	0.75-0.85	.030-.033	1.43	.056	1.70	.067	1.76	.069	39.2	8.82	X	
	24	0.20	0.75-0.85	.030-.033	1.43	.056	1.70	.067	1.76	.069	29.4	6.61	X	
	32	0.03	0.53-0.63	.021-.025	0.91	.036	0.95	.037	1.16	.046	4.4	1.00		X
	34	0.02	0.53-0.63	.021-.025	0.91	.036	0.95	.037	1.16	.046	2.6	0.60		X
	36	0.01	0.53-0.63	.021-.025	0.91	.036	0.95	.037	1.16	.046	1.8	0.40		X
70058	22	0.33	0.75-0.85	.030-.033	1.43	.056	1.70	.067	1.76	.069	39.2	8.82	X	
	24	0.20	0.75-0.85	.030-.033	1.43	.056	1.70	.067	1.76	.069	29.4	6.61	X	
	32	0.03	0.53-0.63	.021-.025	0.91	.036	0.95	.037	1.16	.046	4.4	1.00		X
	34	0.02	0.53-0.63	.021-.025	0.91	.036	0.95	.037	1.16	.046	2.6	0.60		X
	36	0.01	0.53-0.63	.021-.025	0.91	.036	0.95	.037	1.16	.046	1.8	0.40		X
71851	22	0.33	0.75-0.85	.030-.033	1.43	.056	1.70	.067	1.76	.069	39.2	8.82	X	
	24	0.20	0.75-0.85	.030-.033	1.43	.056	1.70	.067	1.76	.069	29.4	6.61	X	
	32	0.03	0.53-0.63	.021-.025	0.91	.036	0.95	.037	1.16	.046	4.4	1.00		X
	34	0.02	0.53-0.63	.021-.025	0.91	.036	0.95	.037	1.16	.046	2.6	0.60		X
	36	0.01	0.53-0.63	.021-.025	0.91	.036	0.95	.037	1.16	.046	1.8	0.40		X

✦ To Achieve IPC-A-620 Class 2 Crimps, the following over-all wire insulation diameter ranges are recommended:

1. Profile 22-24: 1.09-1.65mm (.043-.065 inch)
2. Profile 32-36: 0.50-0.64mm (.020-.025 inch)

- Tool Qualification Notes:

1. Pull Force should be measured with no influence from the insulation crimp.
2. The above specifications are guidelines to an optimum crimp.

CAUTION: Install only Molex terminals listed above with this tool. Do not crimp hardened objects as damage can occur to the tool or die.

Note:
A crimp height chart is provided with this manual as Reference Only. Due to the wide range of wires, strands, insulation diameters, and durometers available, actual crimp height measurements may very slightly. An occasional, destructive, pull force test should be performed to check hand tool crimp. Pull Force value Must exceed the Minimum pull force specifications listed.

OPERATION

Open the tool by squeezing the handles together. At the end of the closing stroke, the ratchet mechanism will release the handles and the hand tool will spring open. See Figure 1.

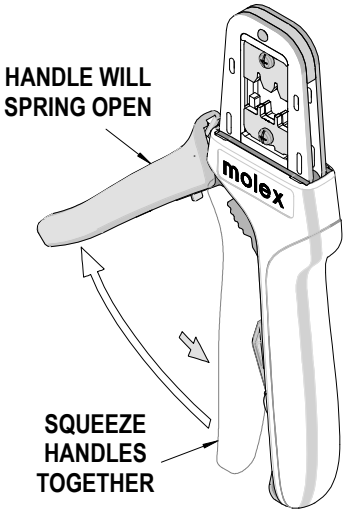

Figure 1

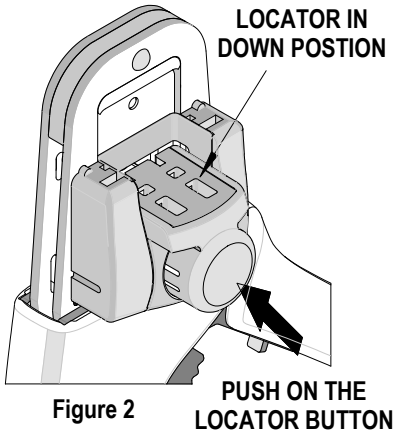

Figure 2

Crimping Terminals

1. Select the desired terminal listed in the preceding charts.
2. Make sure the center of the locator is in the down position. With the locator attached, push the locator button on the back of the hand tool to bring the locator forward through the tooling. See Figure 2.
3. While holding the locator button in, load the terminal into the proper nest opening in the locator based on the wire gauge or terminal type markings on the hand tooling. See Figure 3.

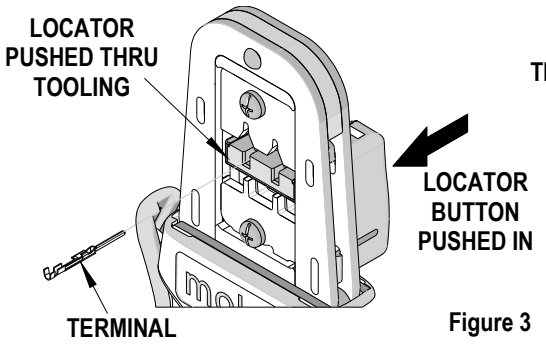

Figure 3

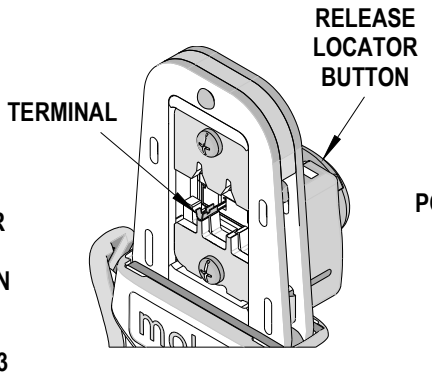

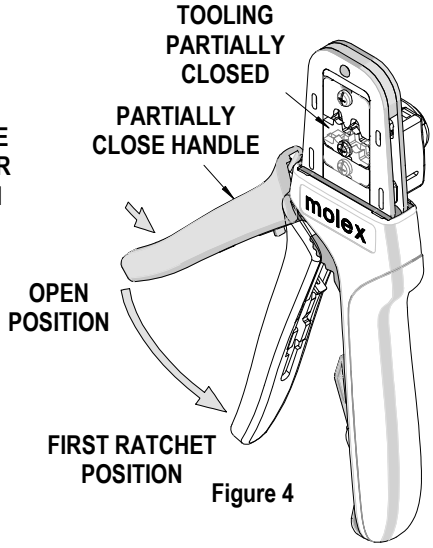

Figure 4

4. Release the locator button, allowing the locator to return to the crimping position.
5. Close the tool handle until the first ratchet position engages. See Figure 4.
6. Insert the properly stripped wire through the terminal and against the wire stop. See Figure 5.
7. Crimp the terminal by squeezing the tool handles until the ratchet mechanism cycle has been completed. Release the handles to open the jaws.

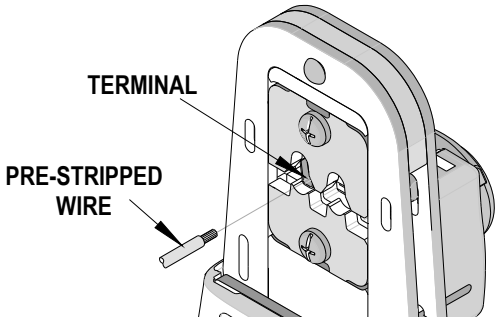

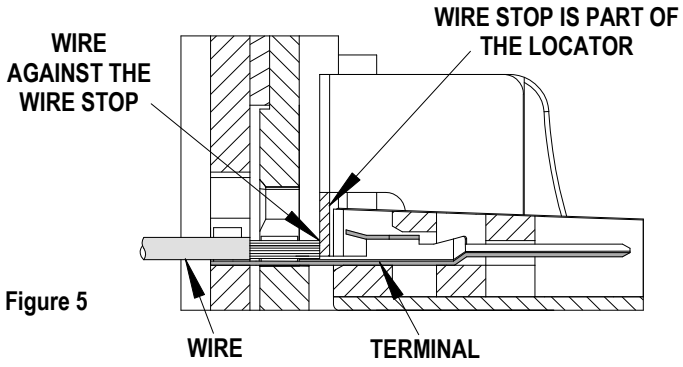

Figure 5

Note: The tamper proof ratchet action will not release the tool until it has been fully closed.

8. Remove the crimped terminal from the terminal locator by pulling on the wire.
9. Visually inspect the crimped terminal for proper crimp location.
10. On some large O.D. wires, it may not be possible to insert the wire with the tool partially closed. Those wires should be inserted with the hand tool in the open position. Insert the wire above the terminal in the punch and against the wire stop then close the tool. See Figure 6.

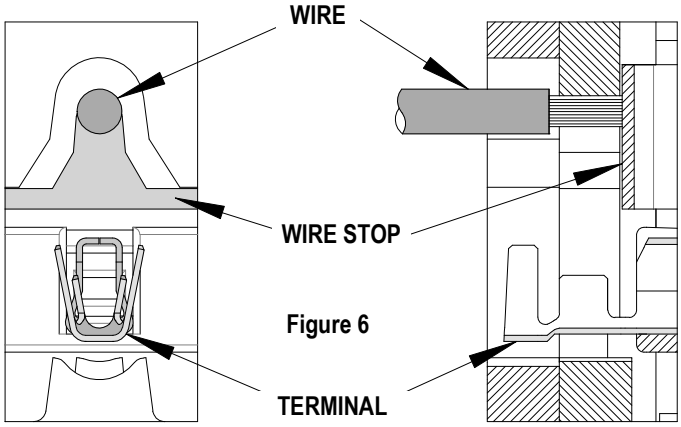

Figure 6

Locator Replacement

See the parts list on the last page of this document for the proper locator order number. Follow the steps below to replace the locator.

1. Open the crimp hand tool.
2. Squeeze gently on the lower area shown in Figure 7A with your thumb and index finger. The lower tabs of the locator should disengage from the hand tool.
3. Lift and pull away from the hand tool. The top locator hooks should slip out of the top slots easily. See Figure 7A.
4. To reinstall the new locator, make sure the hand tool is in the open position.
5. Press the red insert down as far as it will go as shown in Figure 7B.
6. Holding onto the lower part of the locator with your thumb and index finger, insert the locators top hooks (2) into the hand tool top slots.
7. Rotate the locator down and press the lower tabs into the two bottom slots of the hand tool. To secure the locator into place, the lower tabs must snap into place on the hand tool frame.

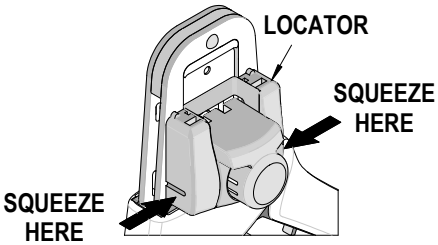

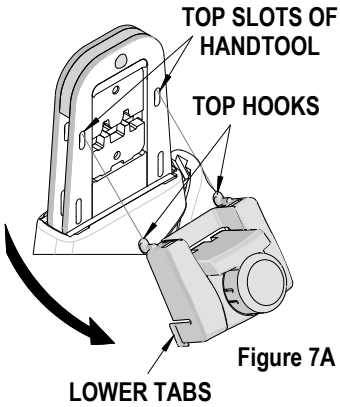

Figure 7A

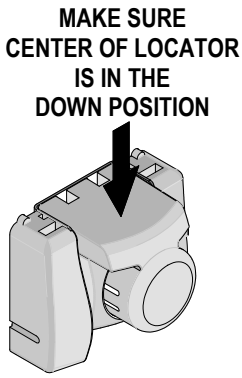

Figure 7B

Right or Left Hand Operation

This hand tool has an added feature that can be converted from a right handed application to a left handed application. It is necessary to reverse the tooling if using the left handed application along with the locator. Follow the steps below:

1. The locator must be removed before reversing the tooling.
2. Remove the M3 BHCS which is holding the upper tooling.
3. Flip the upper tooling to the opposite side and replace the M3 BHCS. Make sure the small markings on the front and back of the hand tool frame match up and are on the outside of the hand tool frame. See Figure 11 and 12.
4. Do the same thing with the lower tooling and tighten the M3 screws. Be sure the small markings line up.
5. Reinstall the locator by following the Instructions in the locator replacement section.

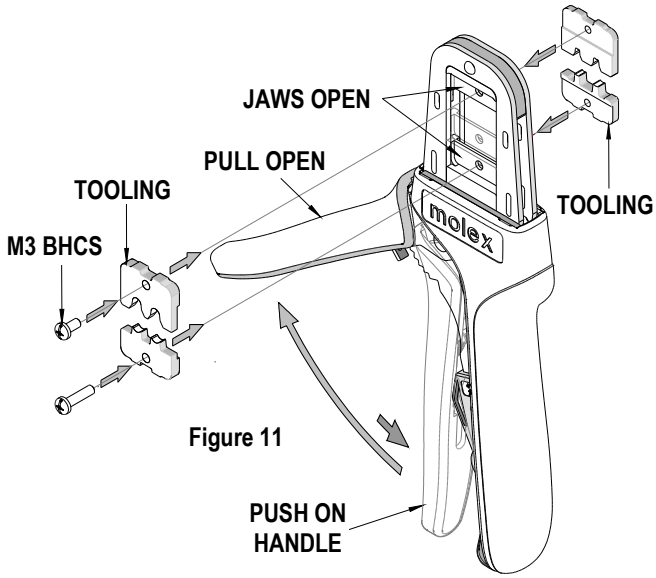

Figure 11

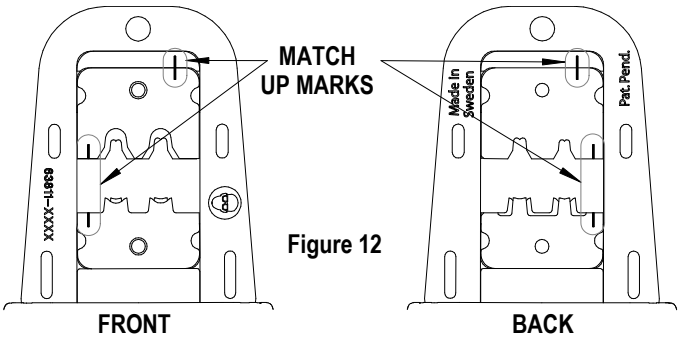

Figure 12

Maintenance

It is recommended that each operator of the tool be made aware of, and responsible for, the following maintenance steps:

1. Remove dust, moisture, and other contaminants with a clean brush, or soft, lint free cloth.
2. Do not use any abrasive materials that could damage the tool.
3. Make certain all pins; pivot points and bearing surfaces are protected with a thin coat of high quality machine oil. Do not oil excessively. The tool was engineered for durability but like any other equipment it needs cleaning and lubrication for a maximum service life of trouble free crimping. Light oil (such as 30 weight automotive oil) used at the oil points, every 5,000 crimps or 3 months, will significantly enhance the tool life.
4. Wipe excess oil from hand tool, particularly from crimping area. Oil transferred from the crimping area onto certain terminations may affect the electrical characteristics of an application.
5. When tool is not in use, keep the handles closed to prevent objects from becoming lodged in the crimping dies, and store the tool in a clean, dry area.

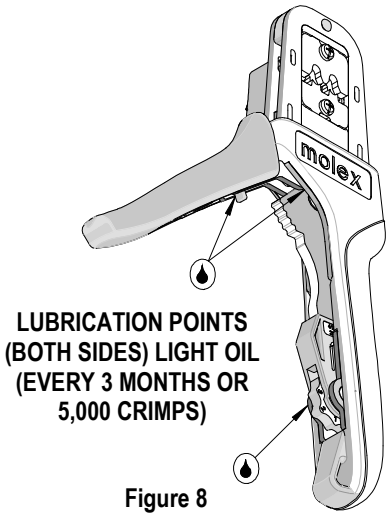

Figure 8

Miscrimps or Jams

Should this tool ever become stuck or jammed in a partially closed position, **Do Not** force the handles open or closed. The tool will open easily by pressing up on the ratchet release lever in the movable handle. See Figure 9.

How to Adjust Tool Preload (See Figure 10)

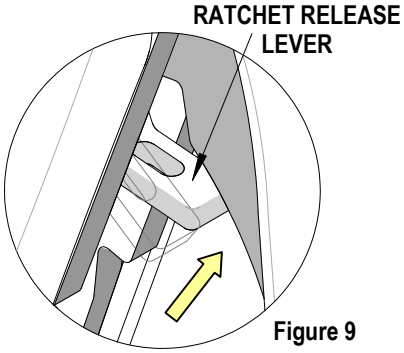

Figure 9

This hand tool is factory preset to 25-45 LBS. preload. It may be necessary over the life of the tool to adjust tool handle preload force. Listed below are the steps required to adjust the crimping force of the hand tool to obtain proper crimp conditions:

1. Hold the hand tool in the palm of your hand as shown in Figure 10. Using the index finger squeeze the link towards the top of the hand tool frame. This will release the preload adjustment wheel.
2. Rotate the setting wheel counter-clockwise (CCW) to increase handle force. The numbers will display higher. To decrease handle force rotate the setting wheel clockwise (CW).
3. Release the link to lock the setting wheel in place.
4. Check the crimp specifications or conduct a pull test after tool handle preload force is adjusted.

Warranty

This tool is for electrical terminal crimping purposes only. This tool is made of the best quality materials. All vital components are long life tested. All tools are warranted to be free of manufacturing defects for a period of 30 days. Should such a defect occur, we will repair or exchange the tool free of charge. This repair or exchange will not be applicable to altered, misused, or damaged tools. This tool is designed for hand use only. Any clamping, fixturing, or use of handle extensions voids this warranty.

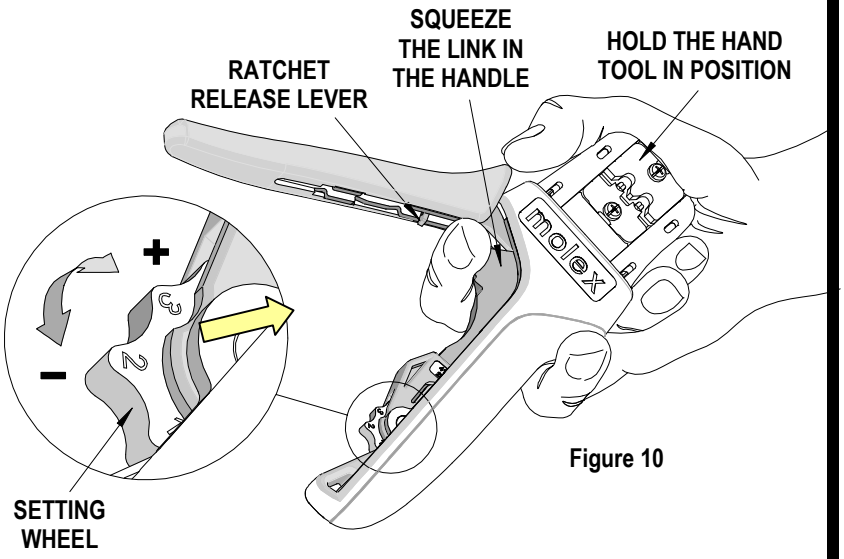

Figure 10

CAUTION: Molex crimp specifications are valid only when used with Molex terminals and tooling.

CAUTIONS:

1. Manually powered hand tools are intended for low volume or field repair. This tool is NOT intended for production use. Repetitive use of this tool should be avoided.
2. Insulated rubber handles are not protection against electrical shock.
3. Wear eye protection at all times.
4. Use only the Molex terminals specified for crimping with this tool.

Certification

Molex does not certify or re-certify hand tools but rather supplies the following guidelines for customers to re-certify hand tools.

- This tool is qualified to pull force only. To re-certify, crimp a terminal to a wire, which has been stripped 12.7mm (1/2") long, so there is no crimping of the insulation. Pull the terminal and wire at a rate no faster than 25mm (1.00") per minute. See the Molex web site for the Quality Crimp Handbook for more information on pull testing.
- If the tool does not meet minimum pull force values, handle preload should be increased and the pull test rerun, (See How to Adjust Preload).
- When the hand tool is no longer capable of achieving minimum pull force, it should be taken out of service and replaced.

PARTS LIST

Item Number	Order Number	Description	Quantity
REF	63811-8700	Hand Crimp Tool	Figure 13
1	63811-8775	Locator Assembly	1
2	63810-0104	Spring, Return	1
3	63810-0105	Spring, Ratchet	1

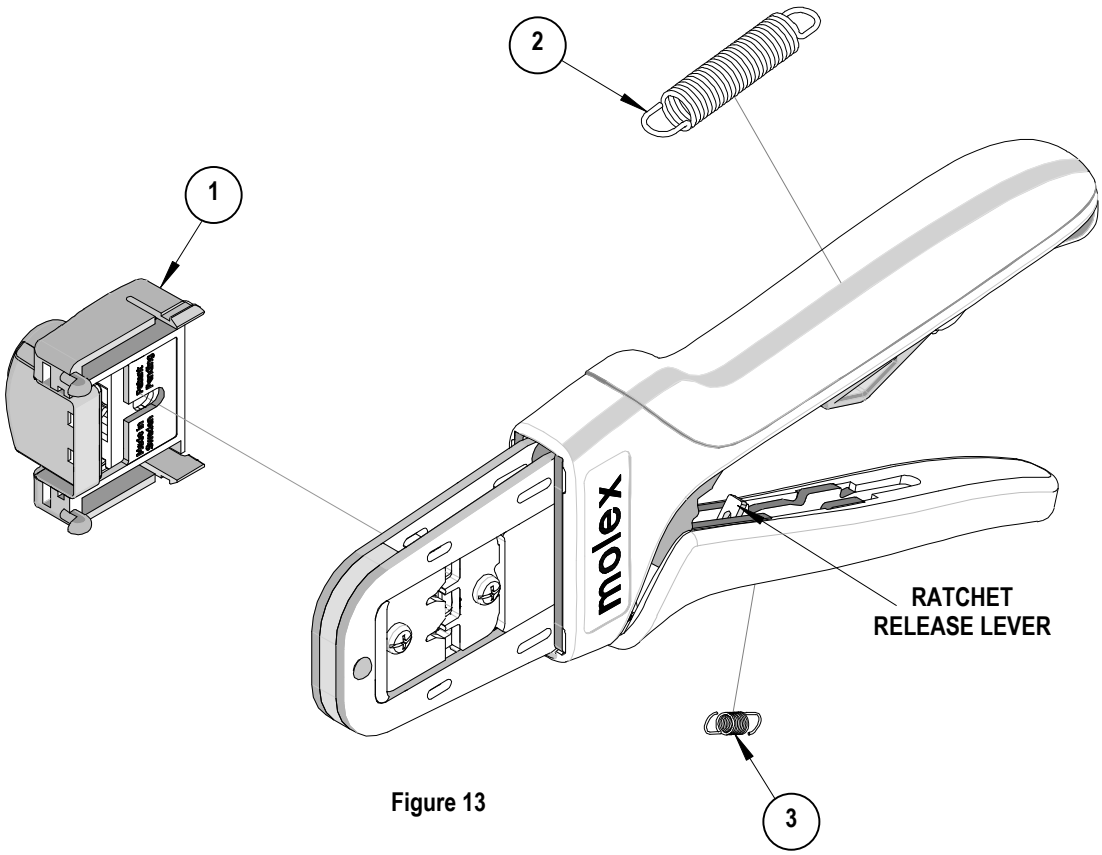

Figure 13

Visit our Web site at http://www.molex.com