Chipsmall Limited consists of a professional team with an average of over 10 year of expertise in the distribution of electronic components. Based in Hongkong, we have already established firm and mutual-benefit business relationships with customers from,Europe,America and south Asia,supplying obsolete and hard-to-find components to meet their specific needs.

With the principle of “Quality Parts,Customers Priority,Honest Operation,and Considerate Service”,our business mainly focus on the distribution of electronic components. Line cards we deal with include Microchip,ALPS,ROHM,Xilinx,Pulse,ON,Everlight and Freescale. Main products comprise IC,Modules,Potentiometer,IC Socket,Relay,Connector.Our parts cover such applications as commercial,industrial, and automotives areas.

We are looking forward to setting up business relationship with you and hope to provide you with the best service and solution. Let us make a better world for our industry!

Contact us

Tel: +86-755-8981 8866 Fax: +86-755-8427 6832
Email & Skype: info@chipsmall.com Web: www.chipsmall.com
Address: A1208, Overseas Decoration Building, #122 Zhenhua RD., Futian, Shenzhen, China

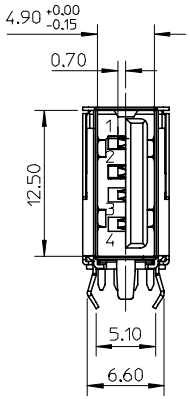

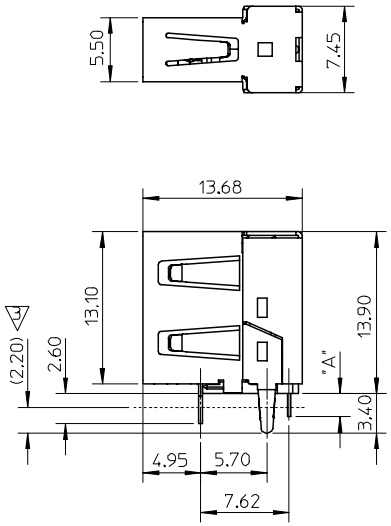

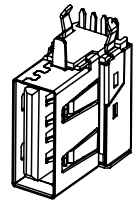

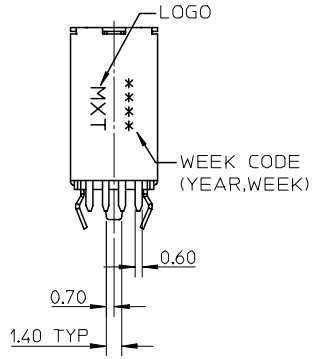

NOTES:
1.MATERIAL:
HOUSING:NYLON, GLASS FILLED, UL94V-0, COLOR:BLACK OR WHITE.
TERMINAL:PHOSPHOR BRONZE.
METAL SHELL:PHOSPHOR BRONZE.
2.PLATING:
TERMINAL:
CONTACT AREA:
(a) GOLD FLASH.
(b) GOLD (Au),THICKNESS=30 MICROINCH/0.76 MICROMETER.
SOLDER TAIL:TIN(Sn),THICKNESS=100 MICROINCH MIN/2.54 MICROMETER MIN.
UNDER PLATE:NICKEL(Ni).
METAL SHELL:TIN (Sn),THICKNESS=100 MICROINCH MIN/2.54 MICROMETER MIN.
UNDER PLATE:COPPER(Cu),THCIKNESS=50 MICROINCH MIN/1.27 MICROMETER MIN.
NICKEL(Ni).
SURFACE APPEARANCE:BRIGHT.
3.DIP PLATING FOR METAL SHELL TIN PLATED AREA.
4.RECOMMENDED PCB THICKNESS:1.60mm or 2.00mm.
5.PRODUCT SPECIFICATION:REFER TO PS-67579-001.
6.PACKAGING SPECIFICATION:REFER TO PK-67579-001.
7.TEST SUMMARY:REFER TO TS-67579-001.
8.LEAD FREE AND ROHS COMPLIANCE PRODUCT.

HSG COLOR	DIMENSION "A"	P/N	GOLD PLATING	RECOMMENDED PCB THICKNESS
BLACK	2.00±0.15	67579-0900	GOLD FLASH	1.60 mm
		67579-0901	30 MICROINCH	
	3.10±0.10	67579-0902	GOLD FLASH	2.00 mm
		67579-0903	30 MICROINCH	
WHITE	2.00±0.15	67579-1900	GOLD FLASH	1.60 mm
		67579-1901	30 MICROINCH	
	3.10±0.10	67579-1902	GOLD FLASH	2.00 mm
		67579-1903	30 MICROINCH	

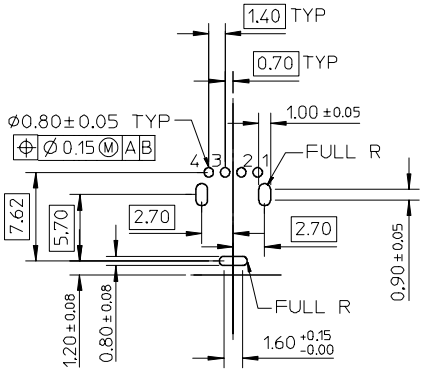

RECOMMENDED PCB LAYOUT
(TOP VIEW)

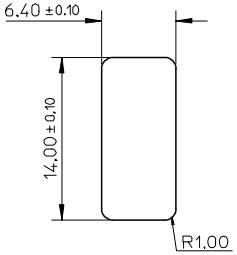

RECOMMENDED PANEL OPENING

REV	DESCRIPTION
A	NEW RELEASE EC NO: SH2006-0313 2006/01/25 DRWN:RTSAI 2006/01/25 CHKD: 2006/01/25 APPR:WMSCHANG 2006/01/25

QUALITY SYMBOLS
▼=0
▽C=0

GENERAL TOLERANCES (UNLESS SPECIFIED)

	mm	INCH
4 PLACES	± ---	± ---
3 PLACES	± ---	± ---
2 PLACES	± 0.25	± ---
1 PLACE	± 0.25	± ---
ANGULAR ± 3 °		

DRAFT WHERE APPLICABLE MUST REMAIN WITHIN DIMENSIONS

DIMENSION STYLE: MM ONLY
SCALE
DESIGN UNITS: METRIC
THIRD ANGLE PROJECTION

DRAWN BY: LINDA	DATE: 2005/07/26	TITLE: USB UP-RIGHT CONNECTOR REVERSE TYPE (LEAD-FREE VERSION)
CHECKED BY: ROGER TSAI	DATE: 2005/07/26	
APPROVED BY: ALLEN LIN	DATE: 2005/07/26	molex MOLEX INCORPORATED
MATERIAL NO.: SEE TABLE		DOCUMENT NO.: SD-67579-002
		SHEET NO.: 1 OF 1

SIZE: A3

THIS DRAWING CONTAINS INFORMATION THAT IS PROPRIETARY TO MOLEX INCORPORATED AND SHOULD NOT BE USED WITHOUT WRITTEN PERMISSION