Chipsmall Limited consists of a professional team with an average of over 10 year of expertise in the distribution of electronic components. Based in Hongkong, we have already established firm and mutual-benefit business relationships with customers from,Europe,America and south Asia,supplying obsolete and hard-to-find components to meet their specific needs.

With the principle of “Quality Parts,Customers Priority,Honest Operation,and Considerate Service”,our business mainly focus on the distribution of electronic components. Line cards we deal with include Microchip,ALPS,ROHM,Xilinx,Pulse,ON,Everlight and Freescale. Main products comprise IC,Modules,Potentiometer,IC Socket,Relay,Connector.Our parts cover such applications as commercial,industrial, and automotives areas.

We are looking forward to setting up business relationship with you and hope to provide you with the best service and solution. Let us make a better world for our industry!


# Contact us

Tel: +86-755-8981 8866 Fax: +86-755-8427 6832
Email & Skype: info@chipsmall.com Web: www.chipsmall.com
Address: A1208, Overseas Decoration Building, #122 Zhenhua RD., Futian, Shenzhen, China

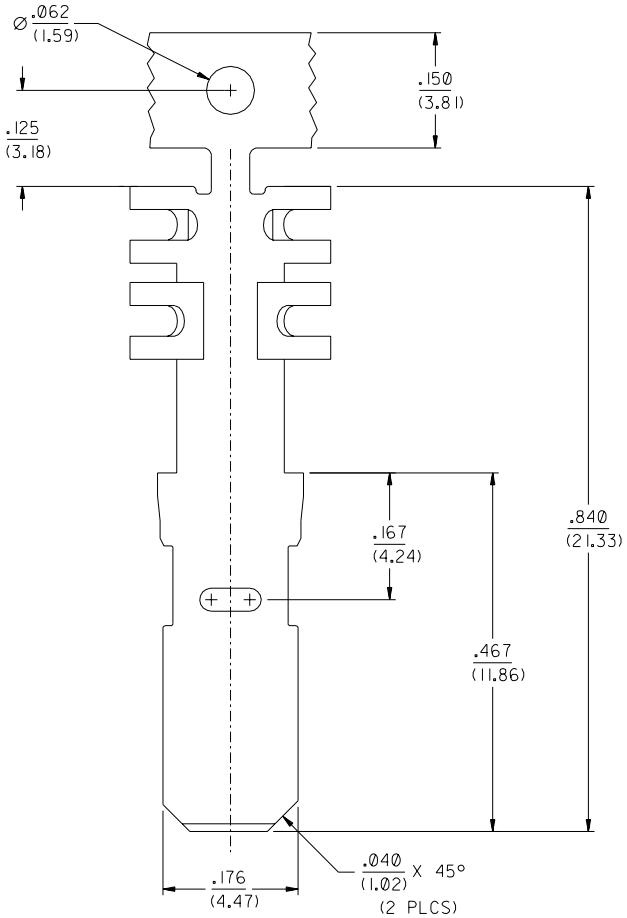


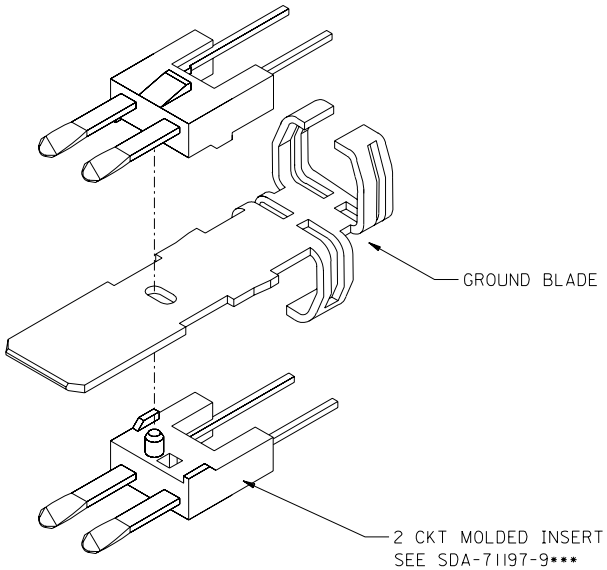


VIEWS SHOWN PRE-TERMINATED

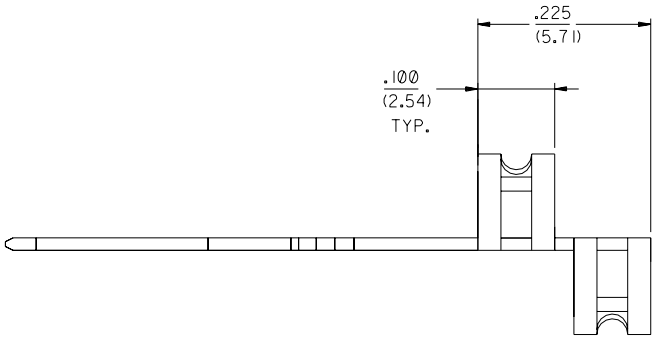


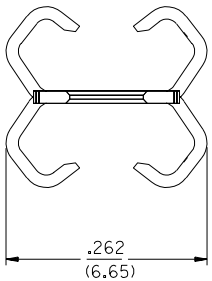


NOTES:

1. MATERIAL: COPPER ALLOY.
2. PLATING - CONTACT AREA:
   30 MICROINCHES/(0.76 MICROMETERS) MINIMUM GOLD OVER NICKEL UNDERPLATE OVERALL.
   OR
   GOLD FLASH OVER 40 MICROINCHES/(1.00 MICROMETERS) MINIMUM PALLADIUM-NICKEL OVER NICKEL UNDERPLATE OVERALL.
3. PLATING -COAX BRAID AREA :
   150 MICROINCHES/(3.81 MICROMETERS) MINIMUM TIN OVER NICKEL UNDERPLATE OVERALL.
4. PARTS ARE SHIPPED ON REELS:
   QUANTITY TO BE 4,000 PARTS PER REEL
5. REFER TO PS-71754-9999 FOR ASSEMBLY AND TERMINATION DETAILS.
6. "X" IN STATUS COLUMN REFLECTS NOT TOOLED

NOTE FOR LEAD FREE CONVERSION:

THE PRIMARY SHIPPING CARTON WILL BE LABELED "COMPLIANT TO RoHS DIRECTIVE 2002/95/EC AND ELV ANNEX II OF DIRECTIVE 2000/53/EC". CARTONS WITHOUT THIS LABEL MAY CONTAIN PRODUCT WITH LEAD.

| STATUS | ITEM PART NUMBERS AND PLATING | |
|---|---|---|
| | 71198-1001 | 30 MICROINCHES/(0.76 MICROMETERS) MINIMUM GOLD OVER NICKEL UNDERPLATE OVERALL IN CONTACT AREA 150 MICROINCHES MINIMUM TIN OVER NICKEL UNDERPLATE OVERALL IN COAX BRAID AREA. |
| X | 71198-1002 | GOLD FLASH OVER 40 MICROINCHES/(1.00 MICROMETES) MINIMUM PALLADIUM- NICKEL OVER NICKEL UNDERPLATE OVERALL IN CONTACT AREA, 150 MICROINCHES MINIMUM TIN OVER NICKEL UNDERPLATE OVERALLIN COAX BRAID AREA. |

| LTR. | REVISIONS |
|---|---|
| C | LEADFREE ECN# UCP2004-0285 DMORGAN 04/04/23 |
| B | REVISED PEG HOLE PER EC# U70490 SCARTH 97/03/07 |
| A | RELEASE DRAWING ECR U70012 96/07/17 MURPHY |

MFG. SH. REV.

DIMENSIONS SHOWN (METRIC) INCH

UNLESS OTHERWISE SPECIFIED TOLERANCES: ANGULAR ± 1/2°

| | INCH | METRIC |
|---|---|---|
| 3 PLACE | ± .010 | --- |
| 2 PLACE | ± | ± 0.25 |
| 1 PLACE | --- | ± |

DRAFT WHERE APPLICABLE MUST REMAIN WITHIN DIMENSIONS

[redacted] REVISE ONLY ON CAD SYSTEM

TITLE: GROUND PLANE FOR EVC CABLE ASSEMBLIES SALES DETAIL

molex MOLEX INCORPORATED LISLE,ILL. 60532 U.S.A.

SHEET NO. 1 OF 1 | DATE 12/13/95

PART NO. SEE CHART | DRWG. NO. SD-71198-100*

DRWG. BY MOS | CHK'D. BY PAM | APP'D. BY JWN | SCALE 8:1

FILE NAME 571198S1 DGN



DIV. CD | SIZE C