Chipsmall Limited consists of a professional team with an average of over 10 year of expertise in the distribution of electronic components. Based in Hongkong, we have already established firm and mutual-benefit business relationships with customers from,Europe,America and south Asia,supplying obsolete and hard-to-find components to meet their specific needs.

With the principle of “Quality Parts,Customers Priority,Honest Operation,and Considerate Service”,our business mainly focus on the distribution of electronic components. Line cards we deal with include Microchip,ALPS,ROHM,Xilinx,Pulse,ON,Everlight and Freescale. Main products comprise IC,Modules,Potentiometer,IC Socket,Relay,Connector.Our parts cover such applications as commercial,industrial, and automotives areas.

We are looking forward to setting up business relationship with you and hope to provide you with the best service and solution. Let us make a better world for our industry!

Contact us

Tel: +86-755-8981 8866 Fax: +86-755-8427 6832
Email & Skype: info@chipsmall.com Web: www.chipsmall.com
Address: A1208, Overseas Decoration Building, #122 Zhenhua RD., Futian, Shenzhen, China

MATERIALS AND FINISHES

BODY, JAM NUT: BRASS
PLATED: NICKEL

CENTER CONTACT: BRASS
PLATED: GOLD

INSULATOR: TEFLON

POSTS: BRASS
PLATED: TIN

LOCKWASHER: PHOS. BRONZE
PLATED: NICKEL

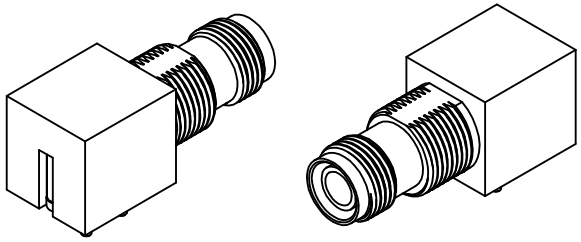

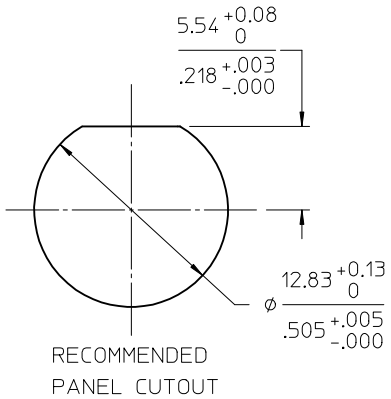

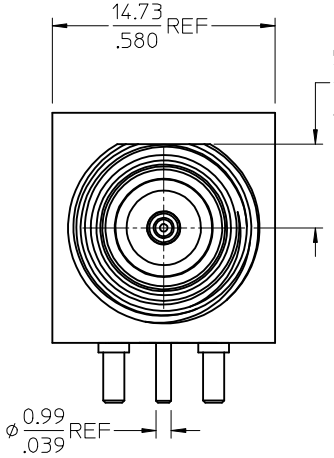

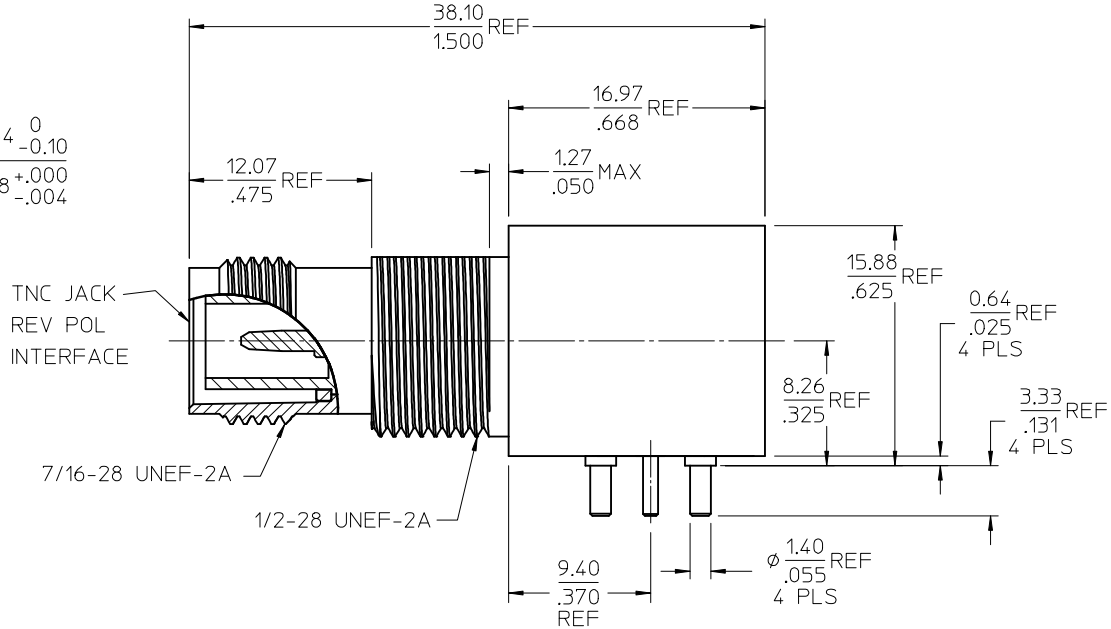

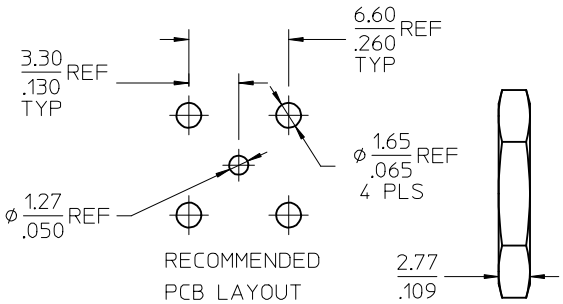

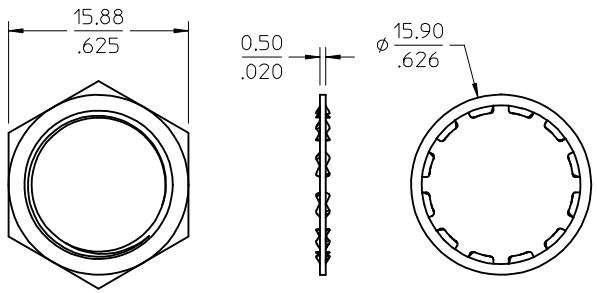

73216-1502	73216-1500 WITH ALL HARDWARE INCLUDED
73216-1501	73216-1500, ONE PER BAG
73216-1500	BULK (NO HARDWARE)
PART NO.	PACKAGING

REV	DESCRIPTION
A1	CHG: ADDED -1502 WITH HARDWARE, ADDED CUT AWAY VIEW EC NO: URF2013-0525 2013/03/19 DRWN: JLEE02 2013/03/19 CH'KD: SSS 2013/03/21 APPR: JWIENER

QUALITY SYMBOLS
▼=0
▽C=0

GENERAL TOLERANCES (UNLESS SPECIFIED)

	mm	INCH
4 PLACES	± ---	± ---
3 PLACES	± ---	± ---
2 PLACES	± ---	± ---
1 PLACE	± ---	± ---
ANGULAR ± 2 °		

DRAFT WHERE APPLICABLE MUST REMAIN WITHIN DIMENSIONS

DIMENSION STYLE: MM/IN
SCALE
DESIGN UNITS: METRIC
THIRD ANGLE PROJECTION

		DATE
DRAWN BY	SSS	2005/01/18
CHECKED BY	TEF	2005/01/18
APPROVED BY	JDW	2005/01/18

MATERIAL NO.: SEE TABLE

TITLE: TNC JACK, R/A, REV POL 50 OHMS, PCB, BLKHD EWR2697 TNC-J/PCB/BLKHD

molex MOLEX INCORPORATED

DOCUMENT NO.: SD-73216-150

SHEET NO.: 1 OF 1

SIZE: C

THIS DRAWING CONTAINS INFORMATION THAT IS PROPRIETARY TO MOLEX INCORPORATED AND SHOULD NOT BE USED WITHOUT WRITTEN PERMISSION