Chipsmall Limited consists of a professional team with an average of over 10 year of expertise in the distribution of electronic components. Based in Hongkong, we have already established firm and mutual-benefit business relationships with customers from,Europe,America and south Asia,supplying obsolete and hard-to-find components to meet their specific needs.

With the principle of “Quality Parts,Customers Priority,Honest Operation,and Considerate Service”,our business mainly focus on the distribution of electronic components. Line cards we deal with include Microchip,ALPS,ROHM,Xilinx,Pulse,ON,Everlight and Freescale. Main products comprise IC,Modules,Potentiometer,IC Socket,Relay,Connector.Our parts cover such applications as commercial,industrial, and automotives areas.

We are looking forward to setting up business relationship with you and hope to provide you with the best service and solution. Let us make a better world for our industry!

Contact us

Tel: +86-755-8981 8866 Fax: +86-755-8427 6832
Email & Skype: info@chipsmall.com Web: www.chipsmall.com
Address: A1208, Overseas Decoration Building, #122 Zhenhua RD., Futian, Shenzhen, China

73251

MATERIALS AND FINISHES:
BODY & COUPLING NUT STAINLESS STEEL PASSIVATED

CENTER CONTACT BERYLLIUM COPPER PLATED GOLD

INSULATOR TEFLON

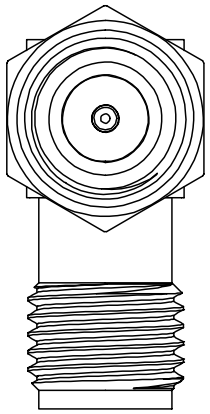

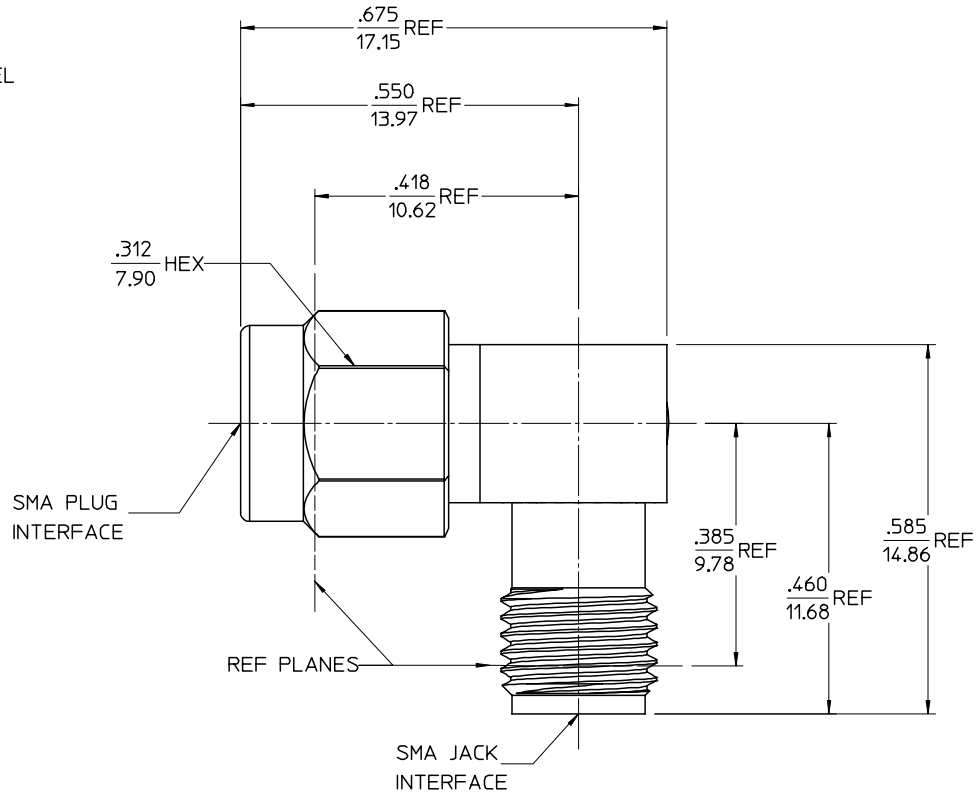

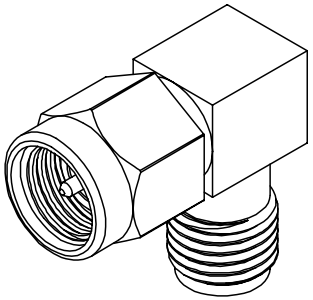

UNLESS OTHERWISE SPECIFIED DIMS ARE INCHES AND ANGLES ARE DEGREES.
- SURFACE FINISH OF 63 ALL OVER.
- NO CHATTER OR NON-UNIFORM
- SURFACE FINISH ALLOWED.
- PARTS TO BE FREE OF BURRS & SHARP EDGES .005 MAX BREAK.
- EXTERNAL THREADS TO BE ROLLED OR SINGLE POINT.
- DIAMETERS TO BE CONCENTRIC WITHIN .003 TIR.

SPECIFICATION	DESCRIPTION
PS-89675-2800	ELECTRO/MECH PERFORM.
MIL-STD-348A, FIG. 310.1	SMA PLUG INTERFACE
MIL-STD-348A, FIG. 310.2	SMA JACK INTERFACE

PART # 73251-0303

REV	DESCRIPTION
A	CHG: REMOVED ASTM CALLOUTS IN MATERIALS AND FINISHES REDREW TO ISO AND FRONT VIEWS DIM .585 REF WAS .583 EC NO. URF-1753 DRWN: TEF 05/21/03 CH'G: SSS 05/21/03 APPR: GMH 05/21/03
A	EC NO. URF-0013 DRWN: EDC 01/06/98 CH'G: DHG 01/09/98 APPR: GMH 01/09/98

QUALITY SYMBOLS: ▼ - 0; ◊ - 0

GENERAL TOLERANCES (UNLESS SPECIFIED)

	mm	INCH
4 PLACES	± ---	± ---
3 PLACES	± ---	± ---
2 PLACES	± ---	± ---
1 PLACE	± ---	± ---
ANGULAR ±1/2°		

DRAFT WHERE APPLICABLE MUST REMAIN WITHIN DIMENSIONS

SCALE 7:1 | DESIGN UNITS INCH | DIMENSION STYLE IN/MM

THIRD ANGLE PROJECTION | REVISE ON CAD ONLY

DRAWN BY EDC | DATE

CHECKED BY DHG | DATE 1998/01/06

APPROVED BY GMH | DATE 1998/01/06

TITLE: SMA PLUG/SMA JACK RA 50 OHM

SMA-PJ/AD

molex MOLEX INCORPORATED

MATERIAL NO. | DOCUMENT NO. SD-73251-030 | SHEET NO. 1 OF 1

THIS DRAWING CONTAINS INFORMATION THAT IS PROPRIETARY TO MOLEX INCORPORATED AND SHOULD NOT BE USED WITHOUT WRITTEN PERMISSION

C

tb_frame_C-B1
rev. B1 2000/08/01