Chipsmall Limited consists of a professional team with an average of over 10 year of expertise in the distribution of electronic components. Based in Hongkong, we have already established firm and mutual-benefit business relationships with customers from,Europe,America and south Asia,supplying obsolete and hard-to-find components to meet their specific needs.

With the principle of “Quality Parts,Customers Priority,Honest Operation,and Considerate Service”,our business mainly focus on the distribution of electronic components. Line cards we deal with include Microchip,ALPS,ROHM,Xilinx,Pulse,ON,Everlight and Freescale. Main products comprise IC,Modules,Potentiometer,IC Socket,Relay,Connector.Our parts cover such applications as commercial,industrial, and automotives areas.

We are looking forward to setting up business relationship with you and hope to provide you with the best service and solution. Let us make a better world for our industry!

Contact us

Tel: +86-755-8981 8866 Fax: +86-755-8427 6832
Email & Skype: info@chipsmall.com Web: www.chipsmall.com
Address: A1208, Overseas Decoration Building, #122 Zhenhua RD., Futian, Shenzhen, China

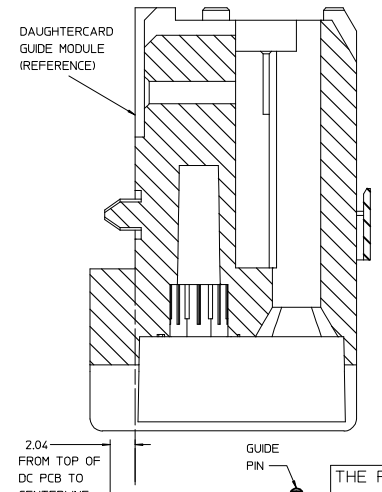

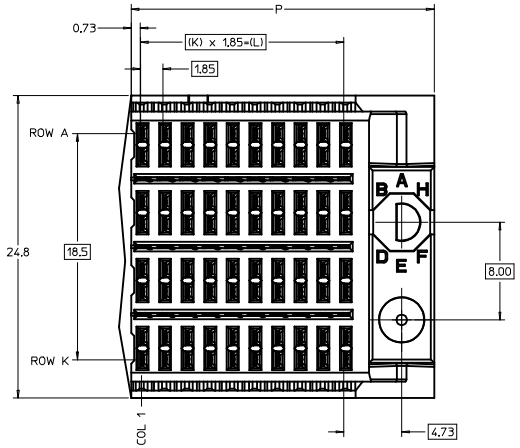

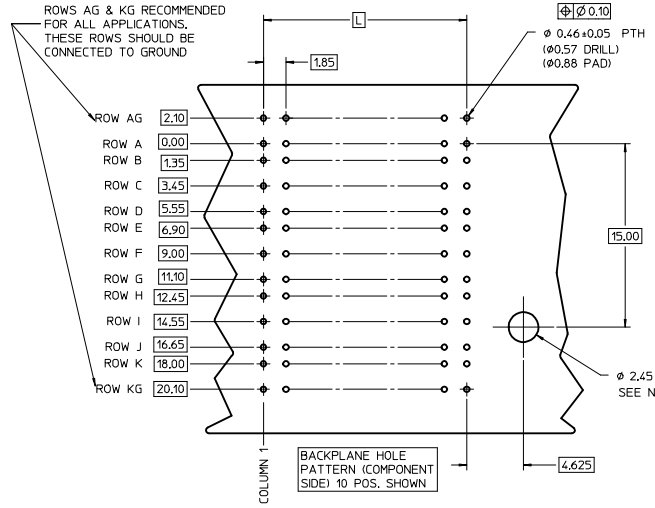

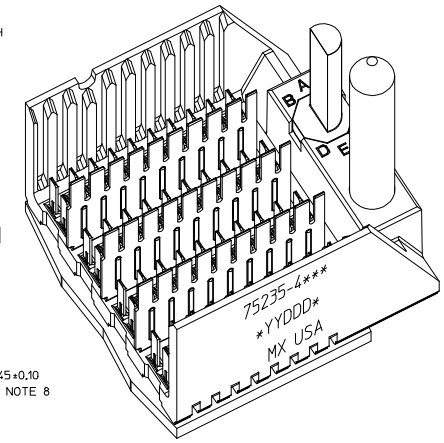

THE PRIMARY CARTON WITH A LABEL STATING "ELV AND RoHS COMPLAINT" IS LEAD FREE. CARTONS WITHOUT THIS LABEL MAY CONTAIN LEAD.

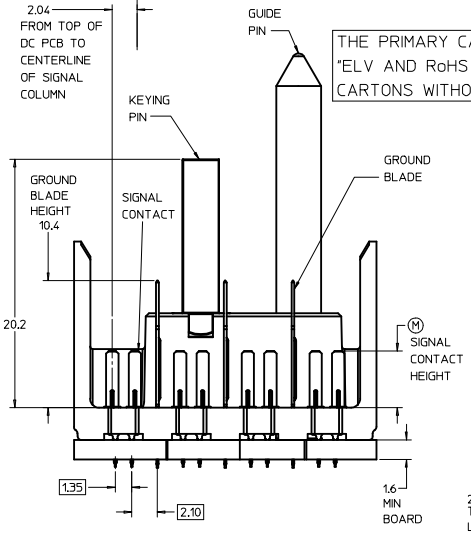

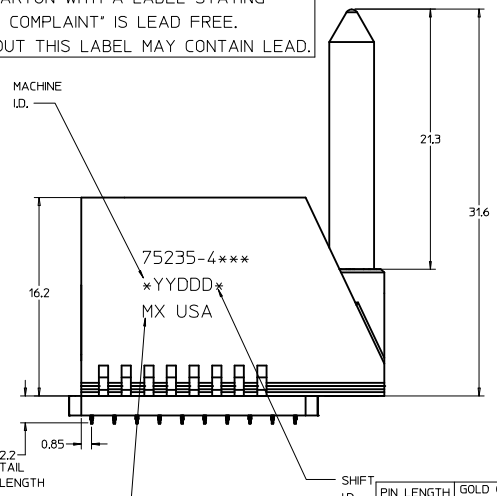

LEAD-FREE PLATING

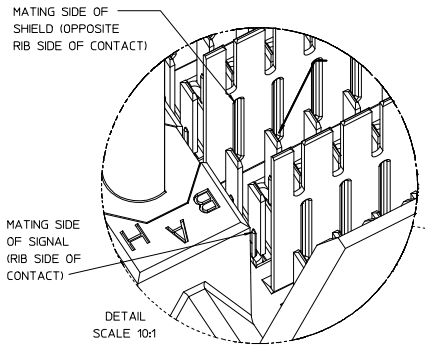

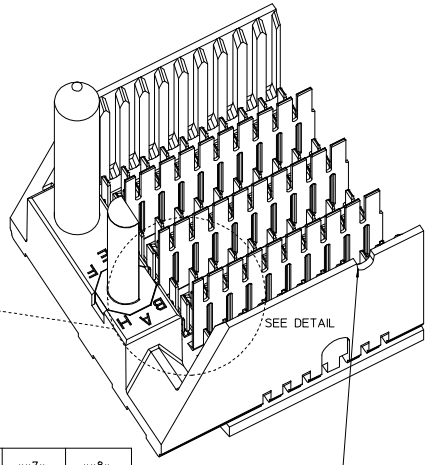

NOTCH DESIGNATES POSITION AT A1. ARCH AND NOTCH ON OPPOSITE SIDE OF PART MARKING.

P/N 75235-( )	-**0*	-**1*	-**2*	-**3*	-**4*	-**5*	-**6*	-**7*	-**8*
KEYING PIN ORIENTATION	0	A	B	C	D	E	F	G	H

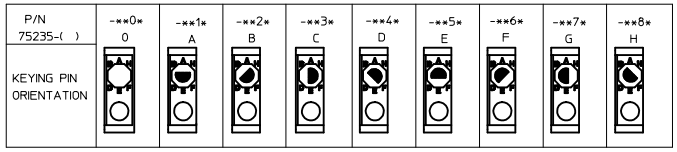

NOTES:

1. MATERIAL: HOUSING - LIQUID CRYSTAL POLYMER (LCP) GLASS-FILLED. UL 94V-0. COLOR - GRAY. SIGNAL CONTACT AND GROUND BLADE - HIGH PERFORMANCE COPPER ALLOY.
2. FINISHES: SELECTIVE GOLD (Au) ON CONTACT AREA. SELECTIVE MATTE TIN (Sn) ON PCB TAILS. NICKEL (Ni) OVERALL.
3. THIS PART CONFORMS TO MOLEX PRODUCT SPECIFICATION PS-75221-999.
4. FOR MIXED CONTACT MATING LENGTHS CONSULT MOLEX FOR AVAILABILITY. CONTACT PAIRS MUST BE THE SAME LENGTH.
5. FOR SPECIFIC PART NUMBER AND MATING INFORMATION PLEASE REFER TO CHART.
6. PACKAGE PER PK-70873-563.
7. MARK PART NUMBER AND DATE CODE APPROXIMATELY WHERE SHOWN.
8. OPTIONAL HOLE LOCATION FOR GROUNDED GUIDE PIN OR ADDITIONAL GUIDE PIN SUPPORT. FOR GROUNDED GUIDE PIN, HOLE TO BE PLATED, DRILL SIZE ø2.58. PAD SIZE ø5.50
9. THESE PART CONFORM TO MOLEX COSMETIC SPECIFICATION PS-45499-002 CLASS B.
10. MAPS (MOLEX ADVANCED PLATING SYSTEM).

MODULE ORIENTATION RIGHT = 4

75235-4 * * *

COLUMN
1=10 COL
2=25 COL

KEYING ORIENTATION
0=NONE
1=A
2=B
ETC...

PIN LENGTH DIM "M"	GOLD (Au) THICKNESS micrometers
0=3.55 mm	0.25 (MAPS)
1=4.55 mm	
2=5.55 mm	
3=3.55 mm	0.76
4=4.55 mm	
5=5.55 mm	
7=3.55 mm	1.27
8=4.55 mm	
9=5.55 mm	

PART NUMBER TABLE				
ASSY PART NO.	K	L	P	TOTAL NO. OF DIFFERENTIAL PAIRS
75235-41**	9	16.65	24.78	40
75235-42**	24	44.40	52.53	100

REV	DESCRIPTION
E	REV TO LEAD-FREE EC NO: UCP2013-0690 DRWN:GES 2012/09/06 CHK:DMWOLFE 2012/09/06 APPR:SMILLER 2012/12/05

QUALITY SYMBOLS: =0 / =0 / =0

GENERAL TOLERANCES (UNLESS SPECIFIED)	mm	INCH
4 PLACES	± ---	± ---
3 PLACES	± ---	± ---
2 PLACES	± 0.25	± ---
1 PLACE	± 0.38	± ---
0 PLACE	±	±
ANGULAR ±1/2°		

DRAFT WHERE APPLICABLE MUST REMAIN WITHIN DIMENSIONS

DIMENSION STYLE: MM ONLY	SCALE: 5:1	DESIGN UNITS: METRIC
THIRD ANGLE PROJECTION		
DRAWN BY: NMARTIN	DATE: 2003/12/16	TITLE: GBX 4-PAIR LF RIGHT END BACKPLANE SALES ASSEMBLY
CHECKED BY: SREED	DATE: 2003/12/16	
APPROVED BY: CBIXLER	DATE: 2003/12/16	molex
MATERIAL NO.: SEE CHART	DOCUMENT NO.: SD-75235-410	SHEET NO.: 1 OF 1
SIZE: D		

THIS DRAWING CONTAINS INFORMATION THAT IS PROPRIETARY TO MOLEX INCORPORATED AND SHOULD NOT BE USED WITHOUT WRITTEN PERMISSION