Chipsmall Limited consists of a professional team with an average of over 10 year of expertise in the distribution of electronic components. Based in Hongkong, we have already established firm and mutual-benefit business relationships with customers from,Europe,America and south Asia,supplying obsolete and hard-to-find components to meet their specific needs.

With the principle of “Quality Parts,Customers Priority,Honest Operation,and Considerate Service”,our business mainly focus on the distribution of electronic components. Line cards we deal with include Microchip,ALPS,ROHM,Xilinx,Pulse,ON,Everlight and Freescale. Main products comprise IC,Modules,Potentiometer,IC Socket,Relay,Connector.Our parts cover such applications as commercial,industrial, and automotives areas.

We are looking forward to setting up business relationship with you and hope to provide you with the best service and solution. Let us make a better world for our industry!

Contact us

Tel: +86-755-8981 8866 Fax: +86-755-8427 6832
Email & Skype: info@chipsmall.com Web: www.chipsmall.com
Address: A1208, Overseas Decoration Building, #122 Zhenhua RD., Futian, Shenzhen, China

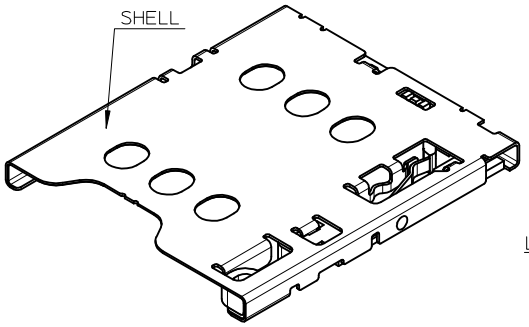

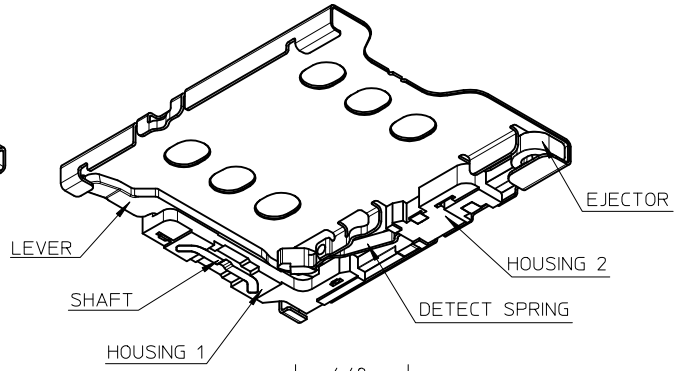

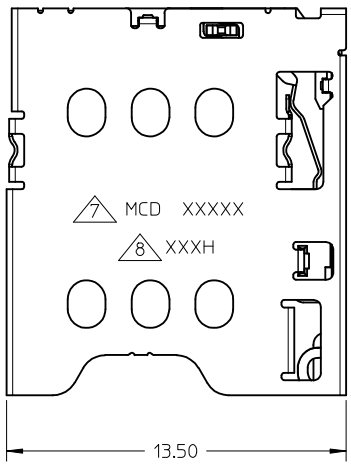

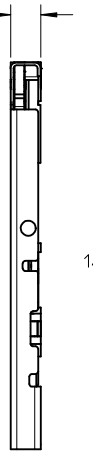

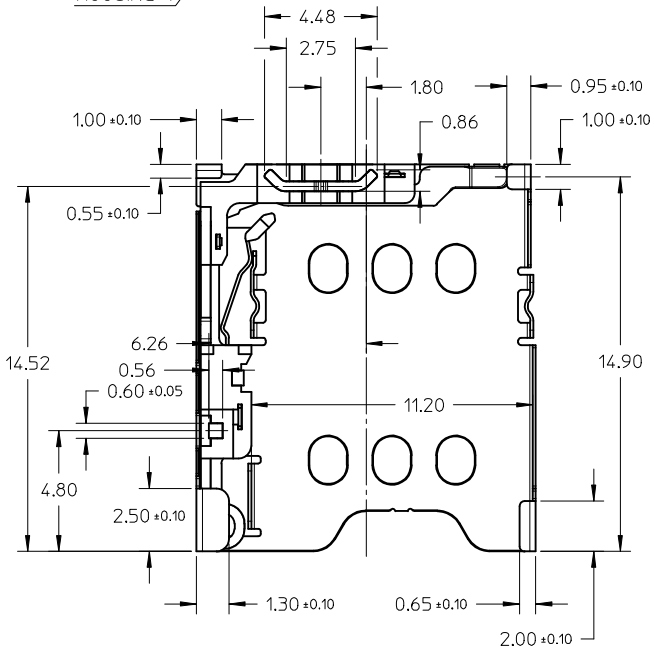

NOTES:

1. MATERIALS:
   INSERT MOLD HOUSING: LCP, UL94V-0;
   LEVER, SHAFT , EJECTOR , SHELL: STAINLESS STEEL;
   DETECT SPRING: COPPER ALLOY;
2. FINISHES:
   DETECT SPRING:
   1.27μM MIN. NICKEL UNDERPLATING OVERALL;
   0.127μM MIN. GOLD PLATING ON CONTACT AREA;
   1.27 μM MIN. TIN PLATING ON SOLDERING TAIL;
   SHELL:
   1.27μM MIN NICKEL UNDERPLATING OVERALL;
   0.025μM MIN GOLD PLATING ON CONTACT AREA AND SOLDERING AREA;
   SHAFT: 1.27μM MIN TIN ON SOLDERING TAIL;
3. PRODUCT SPECIFICATION: PS-78790-001;
4. PACKAGING SPECIFICATION: PK-78790-001;
5. SOLDER TAIL COPLANARITY: 0.08MM MAX;
6. THIS PART IS A FRAME ONLY, IT SHOULD BE USED TOGETHER WITH 0.3MM BLOCK SIM 78545 FOR AN ENTIRE NANO SIM POP OUT SYSTEM;
7. DATE CODE PRINTED: MCD XXXXX;
   - DAY
   - WEEK
   - YEAR
8. P/N MARK PRINTED: XXXH.
   - 120: 787900001 (1.20MM HEIGHT)
   - 130: 787901001 (1.30MM HEIGHT)

P/N	DIM A
787900001	1.20
787901001	1.30

ADD PIN ASSIGNMENT
EC NO: S2014-0126 2013/07/30
DRWN:HLWANG06 2013/09/25
CH'KD:JZENG 2013/11/01
APPR:KHLIM
DESCRIPTION
12
REV

QUALITY SYMBOLS
F_A=0
F_C=0
F_P=0

GENERAL TOLERANCES (UNLESS SPECIFIED)

	mm	INCH
4 PLACES	± ---	± ---
3 PLACES	± ---	± ---
2 PLACES	± 0.20	± ---
1 PLACE	± ---	± ---
0 PLACE	± ---	± ---

ANGULAR ± 3 °

DRAFT WHERE APPLICABLE MUST REMAIN WITHIN DIMENSIONS

DIMENSION STYLE: MM ONLY
SCALE: NTS
DESIGN UNITS: METRIC
THIRD ANGLE PROJECTION

DRAWN BY: HLWANG06 DATE: 2013/07/30
CHECKED BY: JZENG DATE: 2013/09/25
APPROVED BY: KHLIM DATE: 2013/09/25

TITLE: CUSTOMER DRAWING FOR LOW HEIGHT POP OUT NANO SIM CONNECTOR FRAME

molex

MATERIAL NO.: SEE TABLE
DOCUMENT NO.: SD-78790-001
SHEET NO.: 1 OF 4
SIZE: A3

THIS DRAWING CONTAINS INFORMATION THAT IS PROPRIETARY TO MOLEX INCORPORATED AND SHOULD NOT BE USED WITHOUT WRITTEN PERMISSION

NANO SIM CONNECTOR
(WITH BLOCK SIM CONNECTOR)

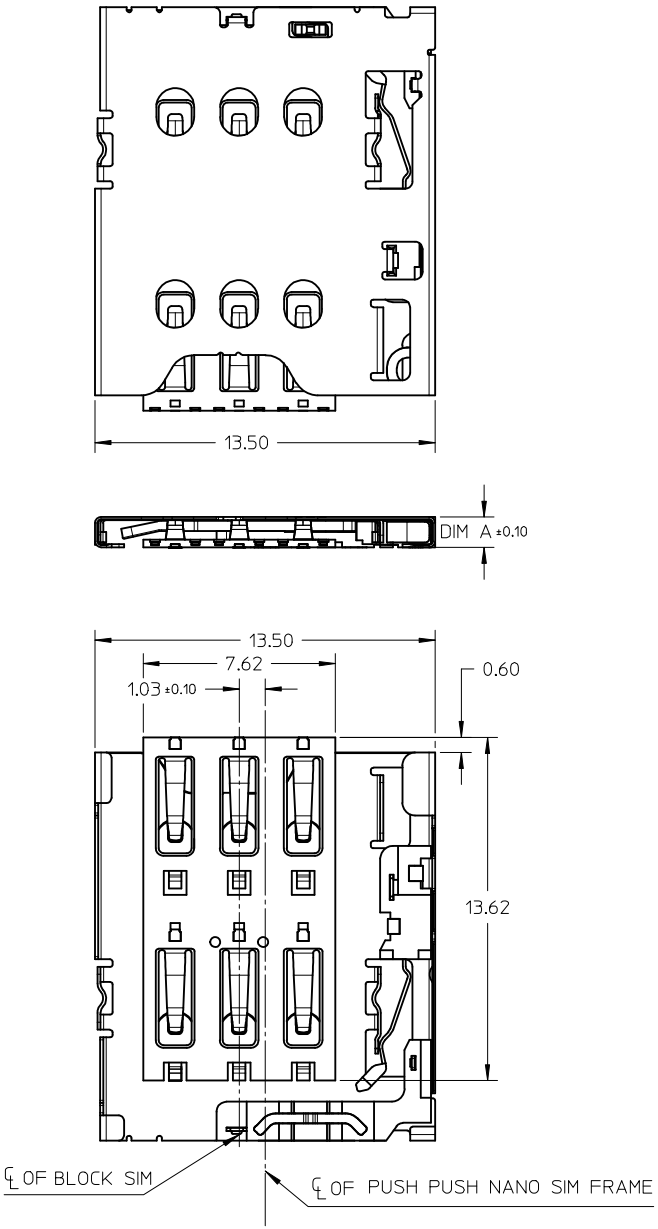

NANO SIM CONNECTOR BOM

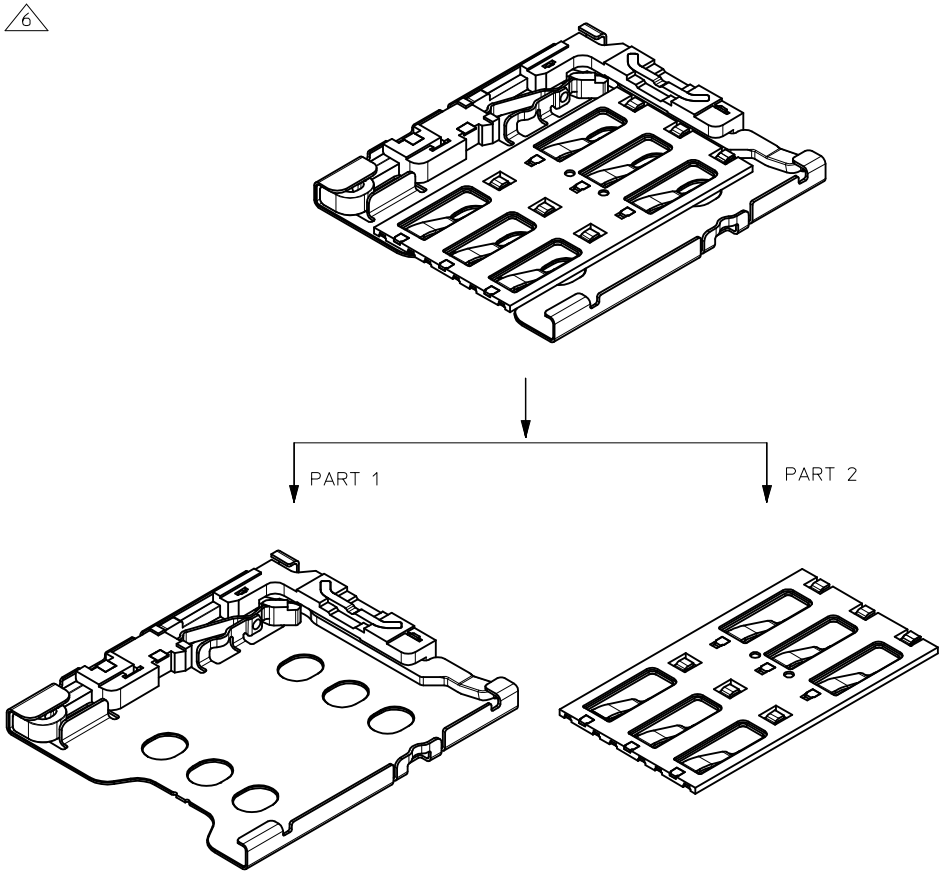

ADD PIN ASSIGNMENT EC NO: S2014-0126 DRWN:HLWANG06 2013/07/30 CH'KD:JZENG 2013/09/25 APPR:KHLIM 2013/11/01	REV	DESCRIPTION	QUALITY SYMBOLS F_A=0 F_C=0 F_P=0	GENERAL TOLERANCES (UNLESS SPECIFIED)	DIMENSION STYLE MM ONLY	SCALE NTS	DESIGN UNITS METRIC
12					DRAWN BY HLWANG06 DATE 2013/07/30	TITLE	THIRD ANGLE PROJECTION
					CHECKED BY JZENG DATE 2013/09/25	CUSTOMER DRAWING FOR LOW HEIGHT POP OUT NANO SIM CONNECTOR FRAME	
					APPROVED BY KHLIM DATE 2013/09/25	molex	
				ANGULAR ± 3 °	MATERIAL NO. SEE TABLE	DOCUMENT NO. SD-78790-001	SHEET NO. 2 OF 4
				DRAFT WHERE APPLICABLE MUST REMAIN WITHIN DIMENSIONS	SIZE A3	THIS DRAWING CONTAINS INFORMATION THAT IS PROPRIETARY TO MOLEX INCORPORATED AND SHOULD NOT BE USED WITHOUT WRITTEN PERMISSION	

	mm	INCH	
4 PLACES	± ---	± ---	
3 PLACES	± ---	± ---	
2 PLACES	± 0.20	± ---	
1 PLACE	± ---	± ---	
0 PLACE	± ---	± ---	

tb_frame_A3_P_AM_T
Rev. G 2012/01/11

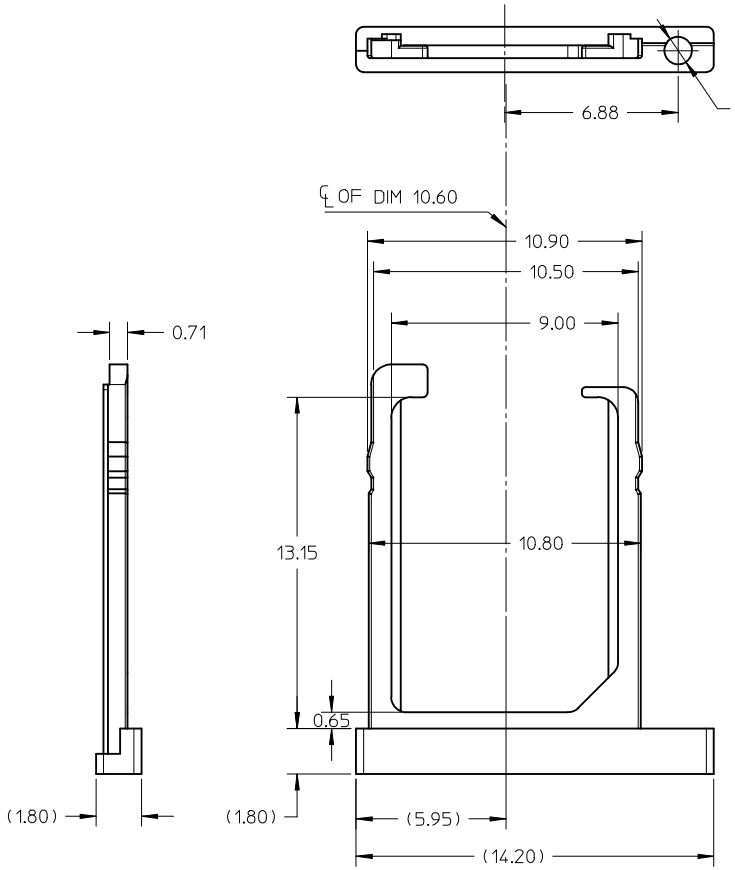

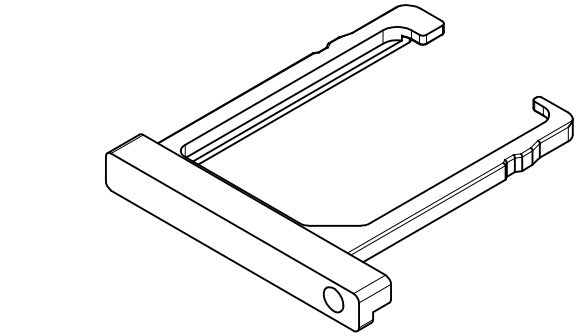

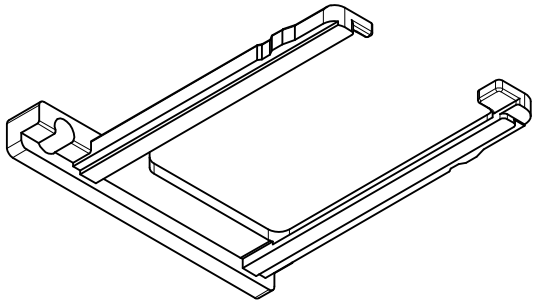

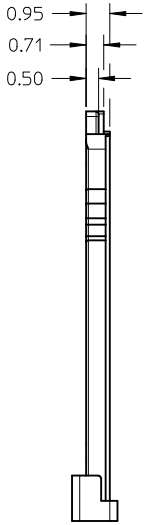

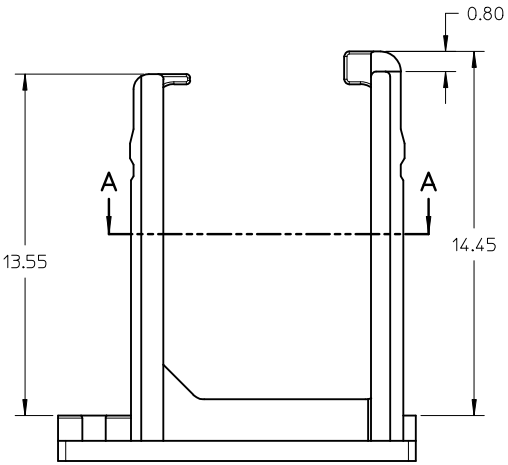

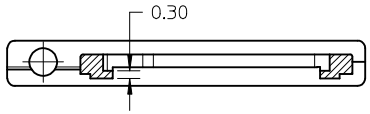

SECTION A-A

RECOMMENDED TRAY PROFILE
TOLERANCE ± 0.05MM

ADD PIN ASSIGNMENT	12	REV	DESCRIPTION
EC NO: S2014-0126			
DRWN:HLWANG06	2013/07/30		
CH'KD:JZENG	2013/09/25		
APPR:KHLIM	2013/11/01		

QUALITY SYMBOLS
F_A=0
F_C=0
F_P=0

GENERAL TOLERANCES (UNLESS SPECIFIED)

	mm	INCH
4 PLACES	± ---	± ---
3 PLACES	± ---	± ---
2 PLACES	± 0.20	± ---
1 PLACE	± ---	± ---
0 PLACE	± ---	± ---

ANGULAR ± 3 °

DRAFT WHERE APPLICABLE MUST REMAIN WITHIN DIMENSIONS

DIMENSION STYLE: MM ONLY
SCALE: NTS
DESIGN UNITS: METRIC
THIRD ANGLE PROJECTION

DRAWN BY	HLWANG06	DATE 2013/07/30
CHECKED BY	JZENG	DATE 2013/09/25
APPROVED BY	KHLIM	DATE 2013/09/25

TITLE: CUSTOMER DRAWING FOR LOW HEIGHT POP OUT NANO SIM CONNECTOR FRAME

molex

MATERIAL NO.: SEE TABLE
DOCUMENT NO.: SD-78790-001
SHEET NO.: 3 OF 4
SIZE: A3

THIS DRAWING CONTAINS INFORMATION THAT IS PROPRIETARY TO MOLEX INCORPORATED AND SHOULD NOT BE USED WITHOUT WRITTEN PERMISSION

PUSH-PUSH NANO SIM FRAME OUTLINE: - - - -

BLOCK SIM OUTLINE: ————

NO WIRING AREA:

78790 SOLDERING AREA:

78545 SOLDERING AREA:

D.S.: DETECT SPRING

GND: GROUND

GND(D.C.): GROUND, IT IS ALSO FOR DETECT CONTACT

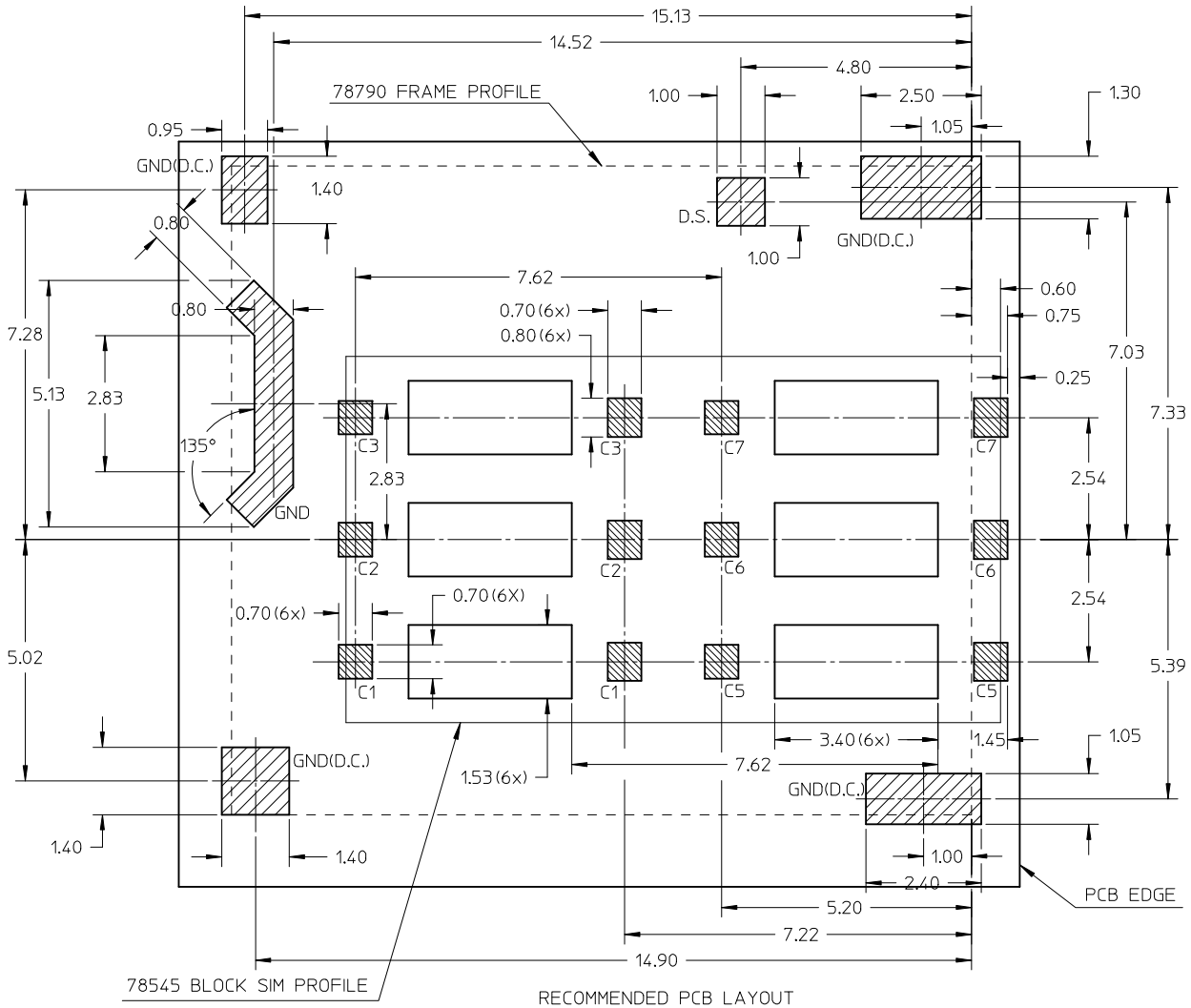

RECOMMENDED PCB LAYOUT
TOLERANCE ± 0.05MM

ADD PIN ASSIGNMENT EC NO: S2014-0126 DRWN:HLWANG06 2013/07/30 CH'KD:JZENG 2013/09/25 APPR:KHLIM 2013/11/01 12	DESCRIPTION REV	QUALITY SYMBOLS F_A=0 F_C=0 F_P=0	GENERAL TOLERANCES (UNLESS SPECIFIED) mm / INCH 4 PLACES ± --- / ± --- 3 PLACES ± --- / ± --- 2 PLACES ± 0.20 / ± --- 1 PLACE ± --- / ± --- 0 PLACE ± --- / ± --- ANGULAR ± 3 ° DRAFT WHERE APPLICABLE MUST REMAIN WITHIN DIMENSIONS	DIMENSION STYLE MM ONLY DRAWN BY HLWANG06 DATE 2013/07/30 CHECKED BY JZENG DATE 2013/09/25 APPROVED BY KHLIM DATE 2013/09/25 MATERIAL NO. SEE TABLE SIZE A3	SCALE NTS DESIGN UNITS METRIC THIRD ANGLE PROJECTION TITLE CUSTOMER DRAWING FOR LOW HEIGHT POP OUT NANO SIM CONNECTOR FRAME molex DOCUMENT NO. SD-78790-001 SHEET NO. 4 OF 4	THIS DRAWING CONTAINS INFORMATION THAT IS PROPRIETARY TO MOLEX INCORPORATED AND SHOULD NOT BE USED WITHOUT WRITTEN PERMISSION

tb_frame_A3_P_AM_T
Rev. G 2012/01/11