Chipsmall Limited consists of a professional team with an average of over 10 year of expertise in the distribution of electronic components. Based in Hongkong, we have already established firm and mutual-benefit business relationships with customers from,Europe,America and south Asia,supplying obsolete and hard-to-find components to meet their specific needs.

With the principle of “Quality Parts,Customers Priority,Honest Operation,and Considerate Service”,our business mainly focus on the distribution of electronic components. Line cards we deal with include Microchip,ALPS,ROHM,Xilinx,Pulse,ON,Everlight and Freescale. Main products comprise IC,Modules,Potentiometer,IC Socket,Relay,Connector.Our parts cover such applications as commercial,industrial, and automotives areas.

We are looking forward to setting up business relationship with you and hope to provide you with the best service and solution. Let us make a better world for our industry!

Contact us

Tel: +86-755-8981 8866 Fax: +86-755-8427 6832
Email & Skype: info@chipsmall.com Web: www.chipsmall.com
Address: A1208, Overseas Decoration Building, #122 Zhenhua RD., Futian, Shenzhen, China

84854

MATERIAL NO.	ENGINEERING NO.	LENGTH
848548021	84854-8021	.5M
848548022	84854-8022	1M
848548023	84854-8023	2M
848548024	84854-8024	3M
848548025	84854-8025	4M
848548026	84854-8026	5M
848548027	84854-8027	6M
848548032	84854-8032	1 FT
848548033	84854-8033	3 FT
848548034	84854-8034	4 FT
848548035	84854-8035	9 FT

NOTES:
1. MATERIAL: SEE TABLE
2. FINISHES: SEE TABLE
3. MATES WITH: DEVICE-NET RECEPTACLE
4. ASSEMBLY IS RoHS COMPLIANT

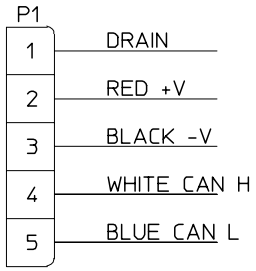

WIRING DIAGRAM

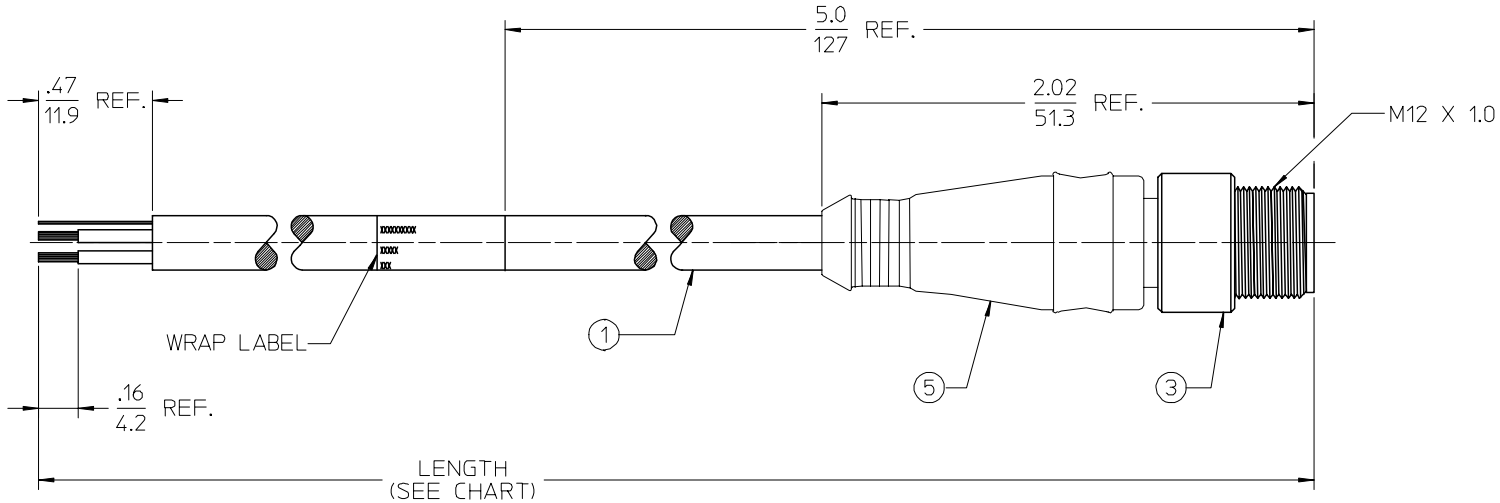

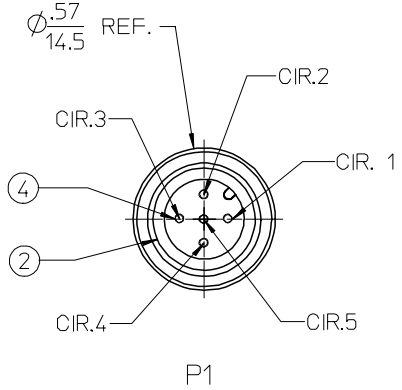

ITEM	QTY.	DESCRIPTION	MATERIAL	FINISH
5	1	OVERMOLD	PVC	GRAY
4	5	CONTACT PINS	Cu ALLOY	GOLD PLATED
3	1	COUPLING, MALE THD, METRIC	BRASS	NICKEL PLATED
2	1	INSULATOR, 5/C, DC KEY	NYLON	BLACK
1	1	CABLE, DEVICE-NET, THIN	PVC	GRAY

RELEASED
EC NO: ETC2008-0052
DRWN:RSTONE 2007/08/20
CH'KD:J.MACNEIL 2007/09/21
APPR:JMACNEIL 2007/09/24
REV A
DESCRIPTION

QUALITY SYMBOLS
▼=0
▽=0

GENERAL TOLERANCES (UNLESS SPECIFIED)

	mm	INCH
4 PLACES	± ---	± ---
3 PLACES	± ---	± ---
2 PLACES	± ---	± .01
1 PLACE	± 0.25	± ---
ANGULAR ±1/2°		

DRAFT WHERE APPLICABLE MUST REMAIN WITHIN DIMENSIONS

DIMENSION STYLE: IN/MM
SCALE: 4:1
DESIGN UNITS: INCH
THIRD ANGLE PROJECTION

DRAWN BY: R.STONE DATE: 2007/08/20
CHECKED BY: J.MACNEIL DATE: 2007/08/22
APPROVED BY: J.MACNEIL DATE: 2007/08/22

TITLE: MICRO-C PLUG, MALE METRIC, 5/C, DEV-NET DC KEY

molex MOLEX INCORPORATED

MATERIAL NO.: SEE CHART
DOCUMENT NO.: SD-84854-018
SHEET NO.: 1 OF 1
SIZE: B

THIS DRAWING CONTAINS INFORMATION THAT IS PROPRIETARY TO MOLEX INCORPORATED AND SHOULD NOT BE USED WITHOUT WRITTEN PERMISSION

tb_frame_B_P_ME_T
Rev. E 2006/04/15