Chipsmall Limited consists of a professional team with an average of over 10 year of expertise in the distribution of electronic components. Based in Hongkong, we have already established firm and mutual-benefit business relationships with customers from,Europe,America and south Asia,supplying obsolete and hard-to-find components to meet their specific needs.

With the principle of “Quality Parts,Customers Priority,Honest Operation,and Considerate Service”,our business mainly focus on the distribution of electronic components. Line cards we deal with include Microchip,ALPS,ROHM,Xilinx,Pulse,ON,Everlight and Freescale. Main products comprise IC,Modules,Potentiometer,IC Socket,Relay,Connector.Our parts cover such applications as commercial,industrial, and automotives areas.

We are looking forward to setting up business relationship with you and hope to provide you with the best service and solution. Let us make a better world for our industry!

Contact us

Tel: +86-755-8981 8866 Fax: +86-755-8427 6832
Email & Skype: info@chipsmall.com Web: www.chipsmall.com
Address: A1208, Overseas Decoration Building, #122 Zhenhua RD., Futian, Shenzhen, China

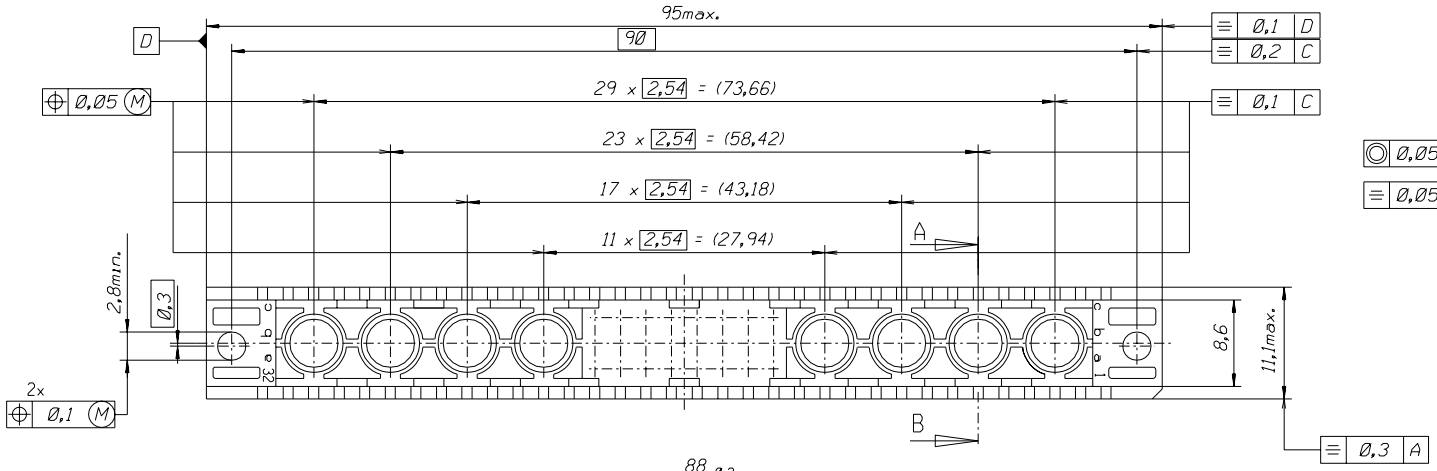

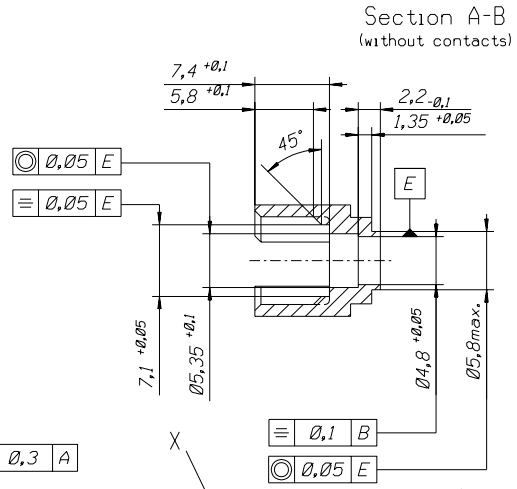

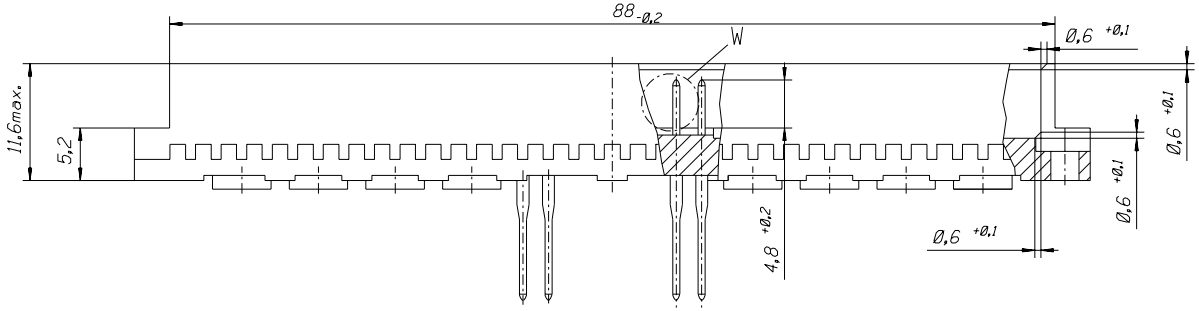

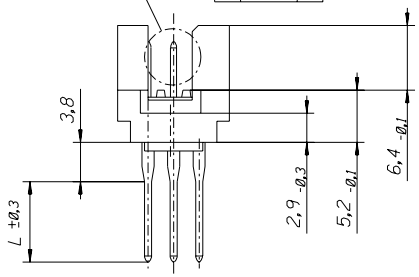

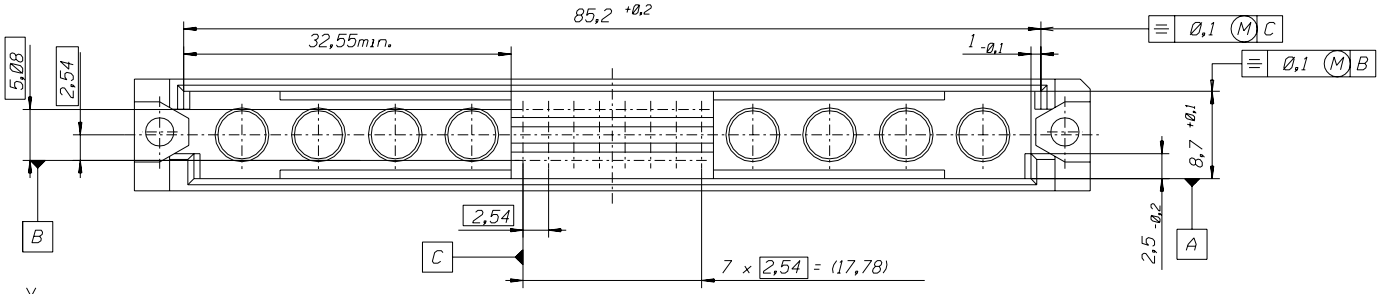

View X
5:1

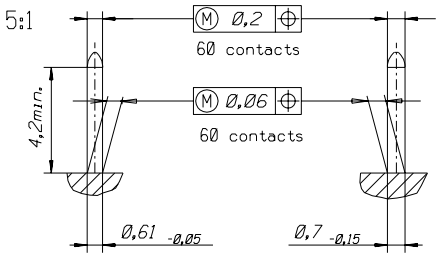

View W
5:1

FIRST ANGLE PROJECTION

REVISE ONLY ON CAD SYSTEM | SH. | REV.

LTR	REVISIONS	FOR PREVIOUS REVISIONS SEE MRI LIST
A		

UNLESS OTHERWISE SPECIFIED TOLERANCES: ANGULAR ±2°

	INCH	METRIC
3 PLACE	± .	±
2 PLACE	± .	±
1 PLACE	± .	±

DRAFT WHERE APPLICABLE MUST REMAIN WITHIN DIMENSIONS

DESIGN DIMENSION ☐ MM ☐ IN.

EQUIVALENT DIMENSION ☐ MM ☐ IN.

IF TWO DIMENSIONS ARE SHOWN THE UPPER IS THE DESIGN DIMENSION, LOWER IS SECONDARY

DRWG BY: Ca | SIGN
CHK'D BY: KN | SIGN
APP'D BY | SIGN
SCALE: 2:1

CADCAM PROJECT NAME: 60393251 dgn

THIS DRAWING CONTAINS INFORMATION THAT IS PROPRIETARY TO MOLEX INC. & SHOULD NOT BE USED WITHOUT WRITTEN PERMISSION

TITLE: 24 pos. Male connector DIN 41612 style M (C-Pin) inverted / Dimensions

molex MOLEX EUROPE

SHEET NO.: 1 OF 3 | DATE: 93/05/05

PART NO.: see sh. no. 2 of 3 | DWG NO.: 603-6093-25 | SIZE: B

PART NO. | DWG. NO.

7132-1283