Chipsmall Limited consists of a professional team with an average of over 10 year of expertise in the distribution of electronic components. Based in Hongkong, we have already established firm and mutual-benefit business relationships with customers from,Europe,America and south Asia,supplying obsolete and hard-to-find components to meet their specific needs.

With the principle of “Quality Parts,Customers Priority,Honest Operation,and Considerate Service”,our business mainly focus on the distribution of electronic components. Line cards we deal with include Microchip,ALPS,ROHM,Xilinx,Pulse,ON,Everlight and Freescale. Main products comprise IC,Modules,Potentiometer,IC Socket,Relay,Connector.Our parts cover such applications as commercial,industrial, and automotives areas.

We are looking forward to setting up business relationship with you and hope to provide you with the best service and solution. Let us make a better world for our industry!

Contact us

Tel: +86-755-8981 8866 Fax: +86-755-8427 6832
Email & Skype: info@chipsmall.com Web: www.chipsmall.com
Address: A1208, Overseas Decoration Building, #122 Zhenhua RD., Futian, Shenzhen, China

MATERIAL No	PERFORMANCE LEVEL	PLATING	CONTACT SEQUENCE/ROW	DIM "L" mm	HOUSING TOP NO.	QTY	HOUSING BOTTOM NO.	QTY	CONTACT NO	QTY	MOUNTING CLIP NO.	QTY	FLUX PROOF	FLUX PROOF	MARKING
850420268	G2/0=CONTACT AREA LEVEL 2/TERMINATION TIN	Au+Ni	1,2,3...32 a+c	2.9	365220001	1	365220003	1	365230014	64	NO	-	NO	NO	STANDARD
850429026	G4/0=CONTACT AREA LEVEL 4/TERMINATION TIN	Au+Ni	1,2,3...32 a+c	2.9	365220001	1	365220003	1	365230031	64	NO	-	NO	NO	STANDARD

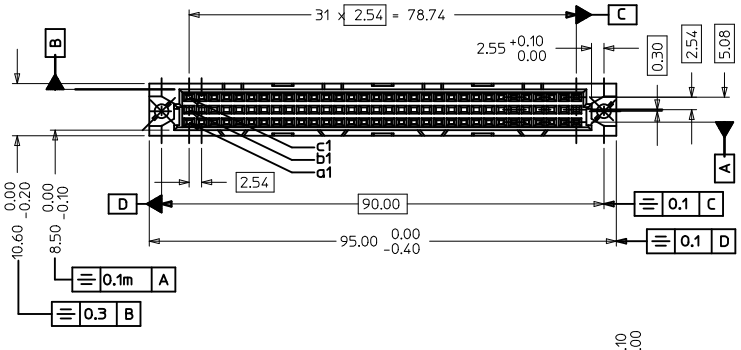

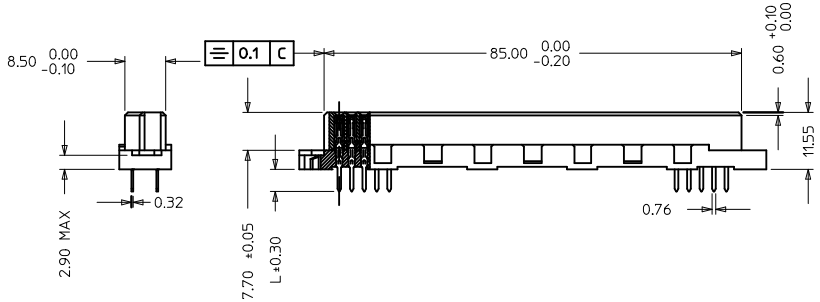

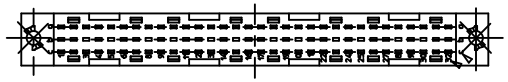

VIEW ON MATING SIDE

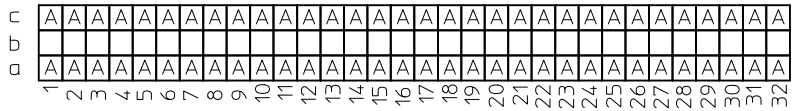

NOTES :-

1) MATERIALS: POLYESTER (PBT), 30% GLASS FILLED, UL94V-0.
COLOUR: PEBBLE GREY RAL 7032
OR ENGINEERING APPROVED EQUIVALENT

2) PRODUCT SPECIFICATION : PS-85042-0001

ENTER DESCRIPTION
EC NO: 12010-0404 2010/02/09
DRWN:SNS01 2010/02/15
CHKD:KPRASAD
APPR:KPRASAD 2010/02/16
DESCRIPTION
A
REV

QUALITY SYMBOLS
▼=0
▽=0

GENERAL TOLERANCES (UNLESS SPECIFIED)

	mm	INCH
4 PLACES	± ---	± ---
3 PLACES	± 0.01	± ---
2 PLACES	± 0.08	± ---
1 PLACE	± 0.1	± ---
ANGULAR ± 2 °		

DRAFT WHERE APPLICABLE MUST REMAIN WITHIN DIMENSIONS

DIMENSION STYLE: MM ONLY
SCALE: 1:1
DESIGN UNITS: METRIC
THIRD ANGLE PROJECTION

DRAWN BY: HARSHA MR DATE: 2009/10/07
CHECKED BY: KPRASAD DATE: 2009/10/07
APPROVED BY: KPRASAD DATE: 2009/10/07

TITLE: ASSEMBLY, DIN 41612, C FEMALE, 64 POS 1.0MM PCB DIA

MOLEX INCORPORATED

MATERIAL NO.: SEE CHART
DOCUMENT NO.: SD-85042-268
SHEET NO.: 1 OF 2
SIZE: A2

THIS DRAWING CONTAINS INFORMATION THAT IS PROPRIETARY TO MOLEX INCORPORATED AND SHOULD NOT BE USED WITHOUT WRITTEN PERMISSION