Chipsmall Limited consists of a professional team with an average of over 10 year of expertise in the distribution of electronic components. Based in Hongkong, we have already established firm and mutual-benefit business relationships with customers from,Europe,America and south Asia,supplying obsolete and hard-to-find components to meet their specific needs.

With the principle of “Quality Parts,Customers Priority,Honest Operation,and Considerate Service”,our business mainly focus on the distribution of electronic components. Line cards we deal with include Microchip,ALPS,ROHM,Xilinx,Pulse,ON,Everlight and Freescale. Main products comprise IC,Modules,Potentiometer,IC Socket,Relay,Connector.Our parts cover such applications as commercial,industrial, and automotives areas.

We are looking forward to setting up business relationship with you and hope to provide you with the best service and solution. Let us make a better world for our industry!

Contact us

Tel: +86-755-8981 8866 Fax: +86-755-8427 6832
Email & Skype: info@chipsmall.com Web: www.chipsmall.com
Address: A1208, Overseas Decoration Building, #122 Zhenhua RD., Futian, Shenzhen, China

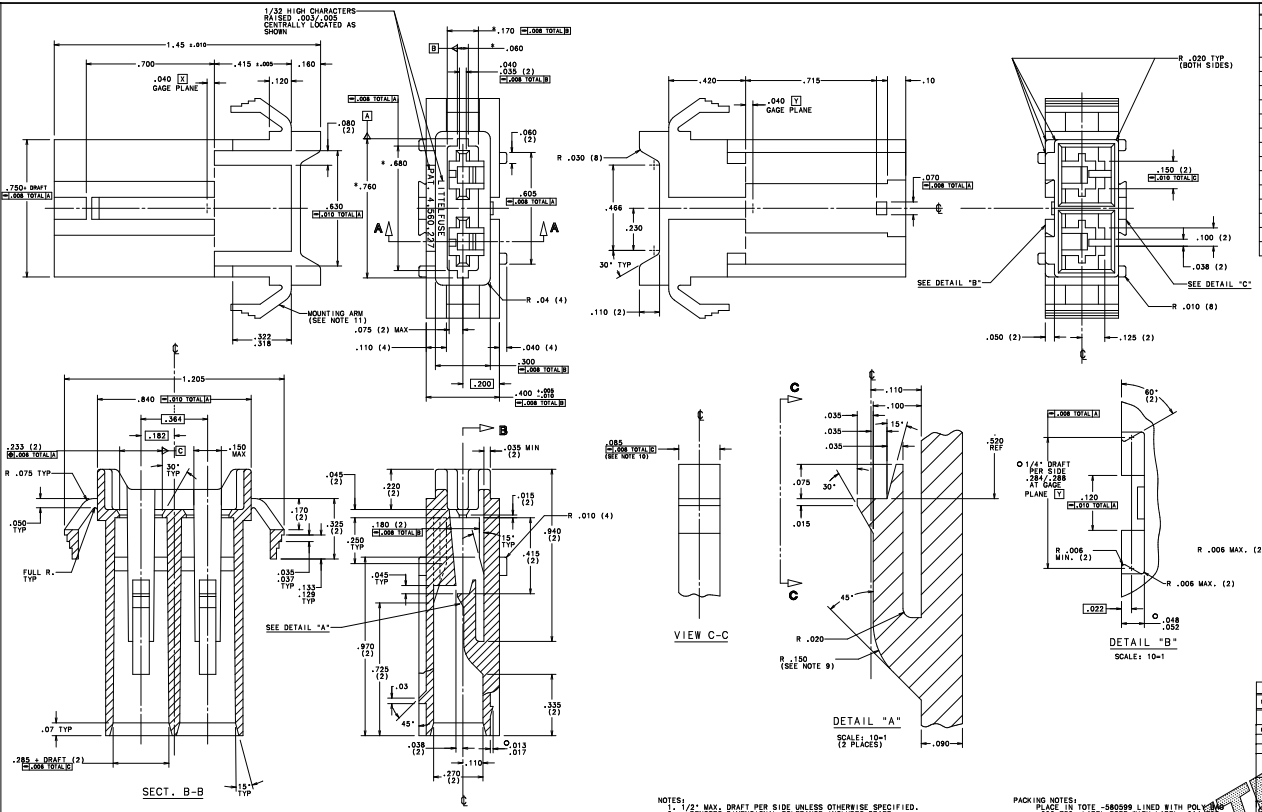

LTR	DATE	REVISION	CHK	APD
T	5/4/98	REMOVED MATERIAL & REGROOVE ON SEE FORMAT CHANGED RIBS IN SIDE VIEW, REDUCED .015-.018 JMB		
U	07/10/98	UPGRADE-ADD THE FOLLOWING SLIMS FROM .150 TO .250, .438 TO .438/.410 TO .394/.406 TO .385, .438 TO .438/.410 TO .394/.406 TO .385, .100 TO .100/.430 TO .410/.400 TO .390 7/10/98 BGP		
V	3/22/99	3868C-CHG. 9.3883 TO 9.5438 PJH		

1	-057268	NYLON 6/6 BLACK	3-3-94	LB
NO	COMPONENT NO	DESCRIPTION	DATE	A/M

BILL OF MATERIAL

UNLESS OTHERWISE SPECIFIED, SUBCOMPONENTS DO NOT INCLUDE PLATING.

O DENOTES CRITICAL CHARACTERISTICS.

CPK DENOTES CRITICAL DIMENSIONS WITH CPK VALUE

SEE DENOTES A MANUFACTURING SUBCOMPONENT OR INDICATION OF PROCESS REQUIREMENT. DESIGNED FOR MEASUREMENT ON PROCESS UP TO DETERMINE CPK.

SEE DENOTES IMPROVED TOLERANCE (SIX)

DENOTES OF DIMENSIONS/MEASUREMENT OF VALUE ON PROCESS REQUIREMENT. DESIGNED FOR MEASUREMENT ON PROCESS UP TO DETERMINE CPK. DENOTES IMPROVED TOLERANCE (SIX).

D

COPIES TO

1	10	15			
2	11	16			
3	12	17			
4	13	18			
5	14	19			
6	15	20			
7	16	43			
8	17	53			

DRN	JMB	DATE 1/16/98	SCALE 4=1
SCH		DATE	SUPER DR
APPD		DATE	MAN ENG DT

LMK/M

TOLERANCE UNLESS OTHERWISE SPECIFIED
TWO PLACE DEC ±.01 FRACTION ±
THREE PLACE DEC ±.005 ANGULAR ±1°

TITLE

BODY FUSEHOLDER

LITTELFUSE DES PLAINES, ILLINOIS 60018

DRAWING NO. V -868-062-000

NOTES:
1. 1/2° MAX. DRAFT PER SIDE UNLESS OTHERWISE SPECIFIED.
2. * DENOTES DIMENSIONAL TOLERANCE INCLUDES DRAFT.
3. ALL UNSPECIFIED RADII TO BE .015 R.
4. ALL SHARP CORNERS TO BE .005 R. MAX.
5. ALL KNOCKOUTS TO BE FLUSH TO .005 BELOW FLUSH.
6. FLASH NOT PERMITTED AROUND KNOCKOUTS.
7. MAX. FLASH LIMITS: .003 HEIGHT; .005 WIDTH.
O 8. BOTH RETENTION ARMS MUST BE CAPABLE OF BEING FLEXED INWARD AGAINST BODY WITHOUT FRACTURING.
O 9. THE GAP BETWEEN THE FLEX ARM AND SIDEWALL DOWN TO THE R.15 MUST BE INSPECTED USING G-1024.
O10. FLASH EXISTING AT THE .090 DIMENSION NOT TO EXCEED .020" PER SIDE FOR A MAXIMUM OF .150" WIDE. UNITS WITH FLASH TO BE EVALUATED USING GAGE G-1168. MAXIMUM ALLOW INSERTION FORCE TO BE 3 LBS. GAUGE MUST REMAIN INTERLOCKED WITH BODY WHEN A 10 LB. PULL FORCE IS APPLIED.
O11. BODY TO BE EVALUATED USING MOUNTING ARM BRITTLENESS GAUGE G-1146.

PACKING NOTES:
PLACE IN TOTE -580599 LINED WITH POLY BAG
-890-750, LABEL TOTE WITH LABEL -834-258
PRINTED PER GENERAL LABEL SPEC. G-580603.

UNCONTROLLED DOCUMENT