Chipsmall Limited consists of a professional team with an average of over 10 year of expertise in the distribution of electronic components. Based in Hongkong, we have already established firm and mutual-benefit business relationships with customers from,Europe,America and south Asia,supplying obsolete and hard-to-find components to meet their specific needs.

With the principle of “Quality Parts,Customers Priority,Honest Operation,and Considerate Service”,our business mainly focus on the distribution of electronic components. Line cards we deal with include Microchip,ALPS,ROHM,Xilinx,Pulse,ON,Everlight and Freescale. Main products comprise IC,Modules,Potentiometer,IC Socket,Relay,Connector.Our parts cover such applications as commercial,industrial, and automotives areas.

We are looking forward to setting up business relationship with you and hope to provide you with the best service and solution. Let us make a better world for our industry!

Contact us

Tel: +86-755-8981 8866 Fax: +86-755-8427 6832
Email & Skype: info@chipsmall.com Web: www.chipsmall.com
Address: A1208, Overseas Decoration Building, #122 Zhenhua RD., Futian, Shenzhen, China

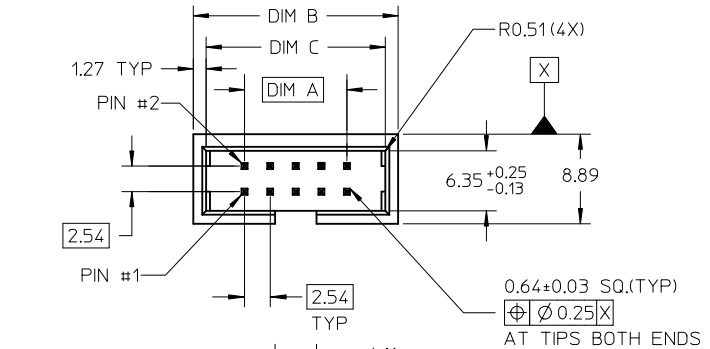

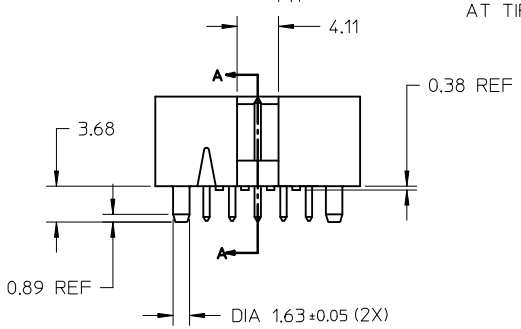

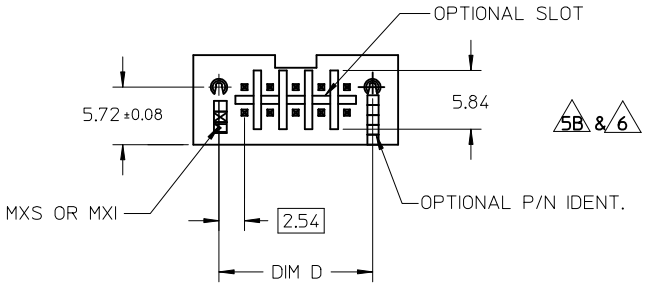

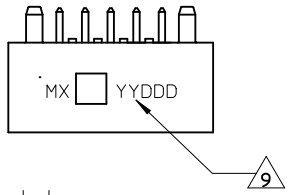

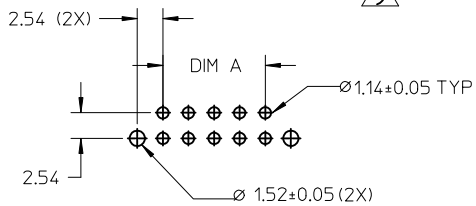

RECOMMENDED PCB PATTERN

PART NUMBER LEGEND

87834 - * * 1 1

CKT SIZES

ASSEMBLY P/N	CKT SIZE	DIM A	DIM B	DIM C	DIM D
87834-0411	04	2.54	12.70	10.16	7.62
87834-0611	06	5.08	15.24	12.70	10.16
87834-0811	08	7.62	17.78	15.24	12.70
87834-1011	10	10.16	20.32	17.78	15.24
87834-1211	12	12.70	22.86	20.32	17.78
87834-1411	14	15.24	25.40	22.86	20.32
87834-1611	16	17.78	27.94	25.40	22.86
87834-1811	18	20.32	30.48	27.94	25.40
87834-2011	20	22.86	33.02	30.48	27.94
87834-2411	24	27.94	38.10	35.56	33.02
87834-2611	26	30.48	40.64	38.10	35.56
87834-3011	30	35.56	45.72	43.18	40.64
87834-3411	34	40.64	50.80	48.26	45.72
87834-4011	40	48.26	58.42	55.88	53.34
87834-4411	44	53.34	63.50	60.96	58.42
87834-5011	50	60.96	71.12	68.58	66.04
87834-5611	56	68.58	78.74	76.20	73.66
87834-6011	60	73.66	83.82	81.28	78.74
87834-6411	64	78.74	88.90	86.36	83.82

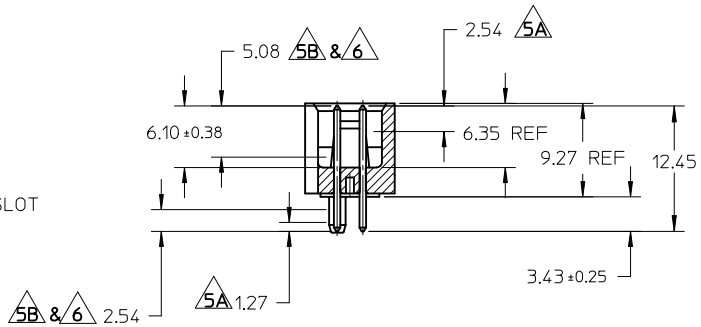

SECTION A-A

NOTES :

1. MATERIAL :
   HOUSING : NYLON 46 GLASS FILLED., UL94V-0, COLOR: BIEGE.
   PIN : COPPER ALLOY.
2. PIN PUSHOUT FORCE 0.91 KG MIN.
3. PRODUCT SPECIFICATION PS-70246-100 APPLIES.
4. WAFER TO BE FLAT WITHIN 0.03MM/CM
5. DIMENSIONS FOR PLATING LOCATIONS : A - MEASURE POINT FOR THICKNESS.
   B - MINIMUM COVERAGE.
6. GOLD END OF PIN UNLESS OVERALL PLATED.
7. FINISH :
   0.13um MIN GOLD FLASH OVER 1.02um MIN.PD/NI
   IN SELECTED AREA AND 2.5um MIN.TIN IN SELECTED
   AREA OVER 1.27um MIN NICKEL OVERALL
8. FOR ILLUSTRATION PURPOSE A 10 CKT IS SHOWN.
9. OPTIONAL LOCATION FOR MANUFACTURER/YEAR/DAY MARKING IF REQUIRED BY CUSTOMER

REMOVE 72CKT OPTION
EC NO: S2012-0308 2011/10/31
DRWN:ATSEE 2011/11/23
CHKD:SKANG 2012/01/10
APPR:MLONG
DESCRIPTION
REV

A4

QUALITY SYMBOLS
▼=0
(C)=0

GENERAL TOLERANCES (UNLESS SPECIFIED)	mm	INCH
4 PLACES	± ---	± ---
3 PLACES	± ---	± ---
2 PLACES	± 0.20	± ---
1 PLACE	± ---	± ---
ANGULAR ± 3 °		

DRAFT WHERE APPLICABLE MUST REMAIN WITHIN DIMENSIONS

DIMENSION STYLE: MM ONLY
SCALE: NTS
DESIGN UNITS: METRIC
THIRD ANGLE PROJECTION

DRAWN BY: RSHAN DATE: 2003/11/21
CHECKED BY: KCLING DATE: 2003/12/05
APPROVED BY: SKTOH DATE: 2003/12/06

TITLE: SALES DRAWING, C-GRID SHROUDED W/SLOTTED & IN-LINE POLARIZATION PEG

molex MOLEX INCORPORATED

MATERIAL NO.: SEE TABLE
DOCUMENT NO.: SD-87834-024
SHEET NO.: 1 OF 1
SIZE: A3

THIS DRAWING CONTAINS INFORMATION THAT IS PROPRIETARY TO MOLEX INCORPORATED AND SHOULD NOT BE USED WITHOUT WRITTEN PERMISSION