Chipsmall Limited consists of a professional team with an average of over 10 year of expertise in the distribution of electronic components. Based in Hongkong, we have already established firm and mutual-benefit business relationships with customers from,Europe,America and south Asia,supplying obsolete and hard-to-find components to meet their specific needs.

With the principle of “Quality Parts,Customers Priority,Honest Operation,and Considerate Service”,our business mainly focus on the distribution of electronic components. Line cards we deal with include Microchip,ALPS,ROHM,Xilinx,Pulse,ON,Everlight and Freescale. Main products comprise IC,Modules,Potentiometer,IC Socket,Relay,Connector.Our parts cover such applications as commercial,industrial, and automotives areas.

We are looking forward to setting up business relationship with you and hope to provide you with the best service and solution. Let us make a better world for our industry!

Contact us

Tel: +86-755-8981 8866 Fax: +86-755-8427 6832
Email & Skype: info@chipsmall.com Web: www.chipsmall.com
Address: A1208, Overseas Decoration Building, #122 Zhenhua RD., Futian, Shenzhen, China

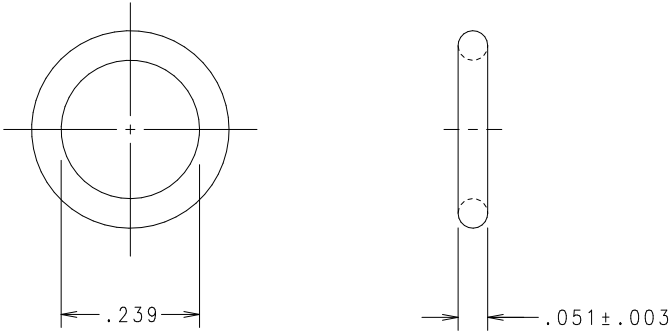

NO	COMPONENT NO	DESCRIPTION	QTY/M	U/M

BILL OF MATERIAL

UNLESS OTHERWISE SPECIFIED, DIMENSIONS DO NOT INCLUDE PLATING.

O	DENOTES CRITICAL CHARACTERISTICS.
CPK	DENOTES CPK DIMENSIONS,-MINIMUM CPK VALUE
⟨ST⟩	DENOTES A CHARACTERISTIC THAT PROVIDES AN INDICATION OF PROCESS PERFORMANCE. PROCEDURE FOR MEASUREMENT AND TRACKING TO BE DEFINED IN LITTELFUSE INSPECTION INSTRUCTIONS.
CP	DENOTES CP DIMENSIONS,-MINIMUM CP VALUE MUST BE WITHIN THE DIMENSIONAL LIMITATIONS SHOWN ON DRAWING AND INITIALLY LOCATED TO ALLOW FOR MAXIMUM TOOL LIFE.

LTR	REVISION	CHK	APD
G	39107C- REVISED & REDRAWN ON NEW FORMAT 4/21/98 JMB		

COPIES TO

1	9	18
2	10	19
3	12	20
4	13	21
5	14	23
6	15	33
7	16	43
8	17	53

MATL SPEC	FINISH
NEOPRENE (70 DUROMETER)	BLACK

DRW	DATE	SCALE
JMB	3/2/98	4=1
CHK	DATE	SUPER DRW
APPD	DATE	RAW STK WT LBS/M

TOLERANCE UNLESS OTHERWISE SPECIFIED

TWO PLACE DEC	±.01	FRACTION	±
THREE PLACE DEC	±.005	ANGULAR	±

TITLE

RING WASHER

Littelfuse®

DES PLAINES, ILLINOIS 60016

REVISION G DRWG. NO. -901-134

UNCONTROLLED DOCUMENT

CAD GENERATED DRAWING - NO PENCIL CHANGES ALLOWED