Chipsmall Limited consists of a professional team with an average of over 10 year of expertise in the distribution of electronic components. Based in Hongkong, we have already established firm and mutual-benefit business relationships with customers from,Europe,America and south Asia,supplying obsolete and hard-to-find components to meet their specific needs.

With the principle of “Quality Parts,Customers Priority,Honest Operation,and Considerate Service”,our business mainly focus on the distribution of electronic components. Line cards we deal with include Microchip,ALPS,ROHM,Xilinx,Pulse,ON,Everlight and Freescale. Main products comprise IC,Modules,Potentiometer,IC Socket,Relay,Connector.Our parts cover such applications as commercial,industrial, and automotives areas.

We are looking forward to setting up business relationship with you and hope to provide you with the best service and solution. Let us make a better world for our industry!

Contact us

Tel: +86-755-8981 8866 Fax: +86-755-8427 6832
Email & Skype: info@chipsmall.com Web: www.chipsmall.com
Address: A1208, Overseas Decoration Building, #122 Zhenhua RD., Futian, Shenzhen, China

Alle Rechte vorbehalten/ All rights reserved

X

Lochbild
board drillings

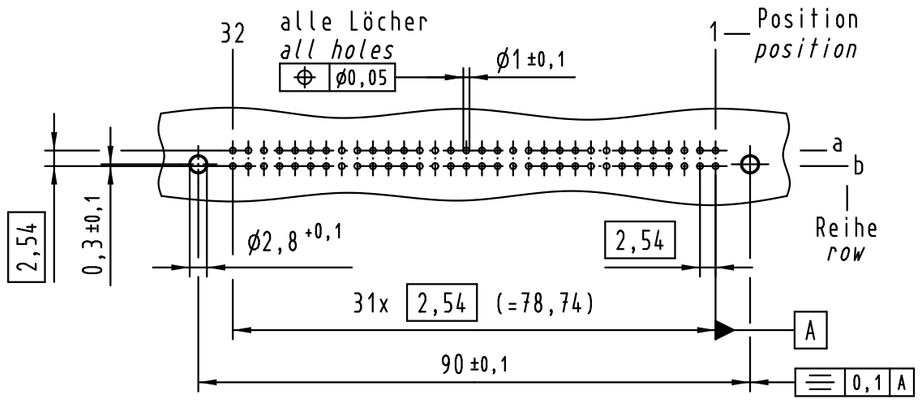

X

Kontaktanordnung
contact arrangement

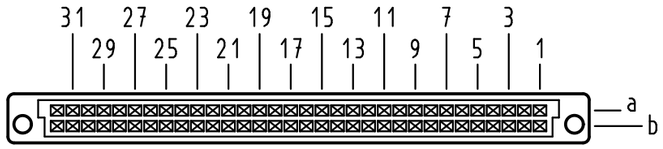

64 Einlöt Kontakte
64 solder contacts

⊠ = Kontaktposition belegt
= position with contact

□ = Kontaktposition nicht belegt
= position without contact

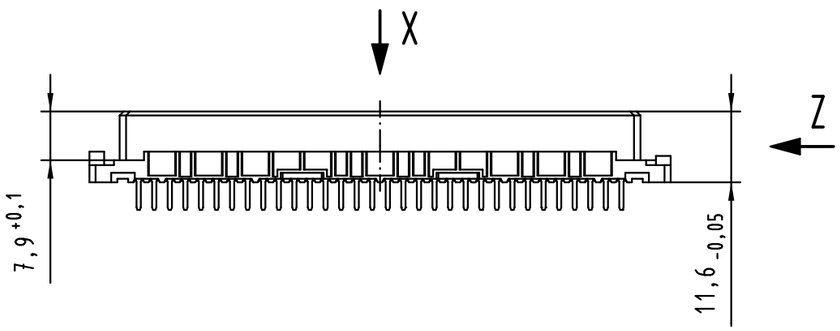

Z (2:1)

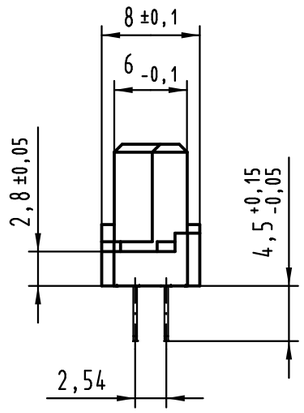

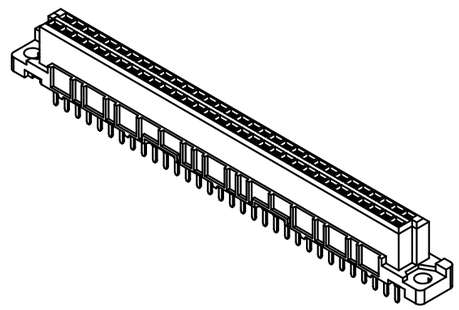

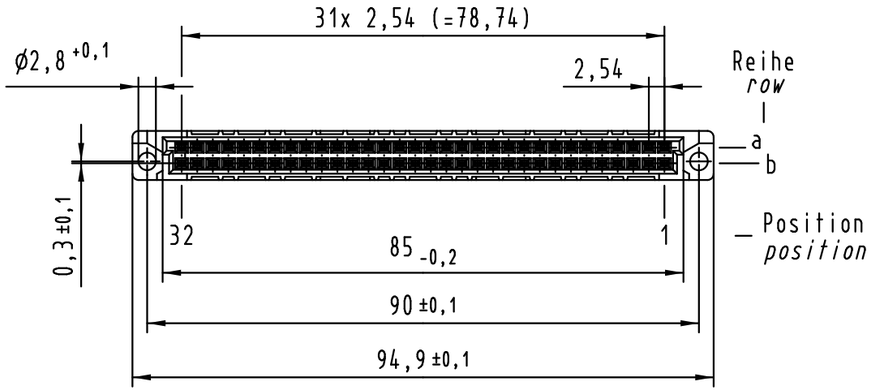

(1) weitere Informationen siehe: DS 09 03 213 02 01
further information see: DS 09 03 213 02 01

09 02 264 6829	2
Bestell-Nr. *part-no.*	Anforderungsstufe *performance level* (1)

All Dimensions in mm
Original Size DIN A 3

Techn. Character.

Nicht tolerierte Maße/ *Free size tolerances*
IEC 60603-2

Mod.	Dat.	Name
36468	06.01.12	Hage.
36051	16.06.10	Hage.
35939		

	Dat.	Name
Detail.	16.11.09	Hage.
Insp.	16.11.09	LehT
Stand.		

Maßstab/*Scale* 1:1

Bauform / *type* B
Federleiste Einlöt 4,5 64-polig, SMC
female connector solder 4.5 64-pole, SMC

HARTING Electronics GmbH & Co. KG
D-32339 ESPELKAMP

TB 09 02 264 x829

Blatt/ *page* /

Sub.