Chipsmall Limited consists of a professional team with an average of over 10 year of expertise in the distribution of electronic components. Based in Hongkong, we have already established firm and mutual-benefit business relationships with customers from,Europe,America and south Asia,supplying obsolete and hard-to-find components to meet their specific needs.

With the principle of “Quality Parts,Customers Priority,Honest Operation,and Considerate Service”,our business mainly focus on the distribution of electronic components. Line cards we deal with include Microchip,ALPS,ROHM,Xilinx,Pulse,ON,Everlight and Freescale. Main products comprise IC,Modules,Potentiometer,IC Socket,Relay,Connector.Our parts cover such applications as commercial,industrial, and automotives areas.

We are looking forward to setting up business relationship with you and hope to provide you with the best service and solution. Let us make a better world for our industry!

Contact us

Tel: +86-755-8981 8866 Fax: +86-755-8427 6832
Email & Skype: info@chipsmall.com Web: www.chipsmall.com
Address: A1208, Overseas Decoration Building, #122 Zhenhua RD., Futian, Shenzhen, China

Alle Rechte vorbehalten/ All rights reserved

X
Lochbild
board drillings

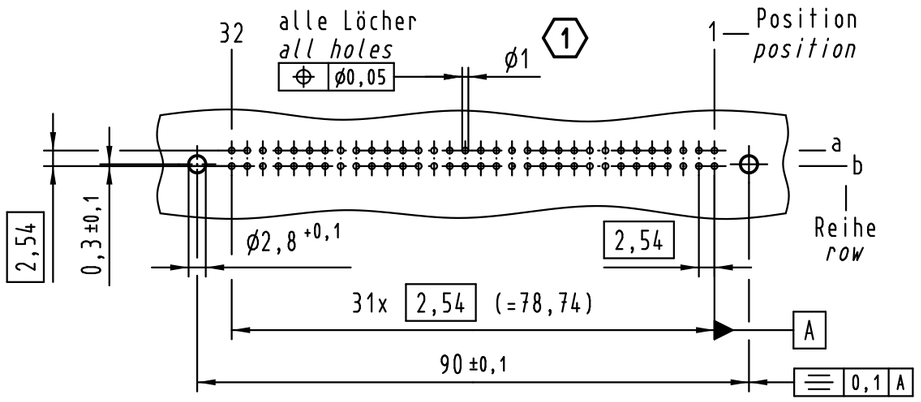

X
Kontaktanordnung
contact arrangement

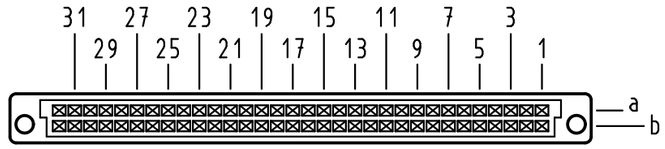

64 Einpress Kontakte
64 press-in contacts

⊠ = Kontaktposition belegt
= *position with contact*

□ = Kontaktposition nicht belegt
= *position without contact*

Z (2:1)

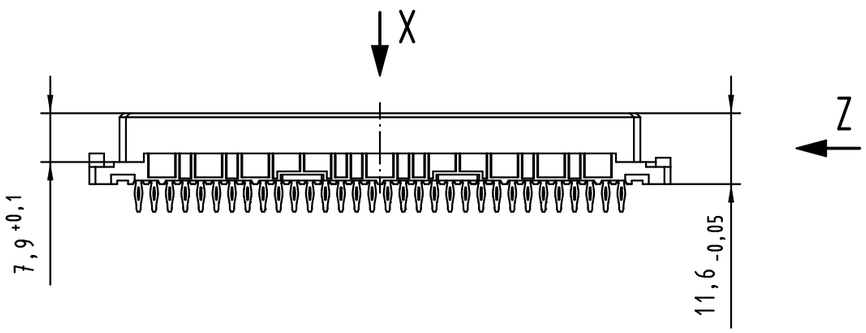

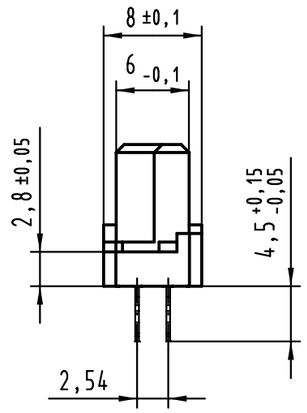

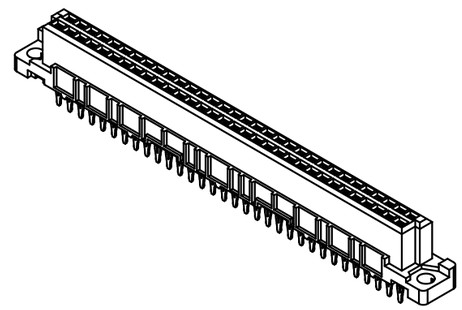

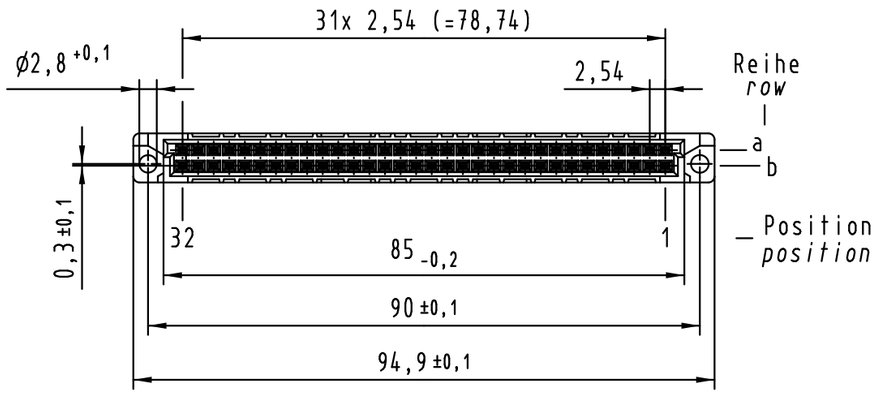

(1) Empfohlener Lochaufbau und weitere Informationen siehe: DS 09 03 210 00 01
recommended configuration of plated through holes and further information see: DS 09 03 210 00 01

09 02 264 6850	2
09 02 264 2850	1
Bestell-Nr. *part-no.*	Anforderungsstufe *performance level* (1)

All Dimensions in mm
Original Size DIN A 3

Techn. Character.

Nicht tolerierte Maße/ *Free size tolerances*
IEC 60603-2

Mod.	Dat.	Name
36468	06.01.12	Hage.
36412	13.07.11	Hage.
34306	02.07.07	LehT
30231	08.02.02	Rie.
26962	24.01.00	Rie.
26091		

	Dat.	Name
Detail.	12.10.99	Rie.
Insp.	12.10.99	Pa.
Stand.		

Maßstab/*Scale* 1:1

HARTING Electronics GmbH & Co. KG
D-32339 ESPELKAMP

Bauform / *type* B
Federleiste Einpress 4,5 64-polig
female connector press-in 4.5 64-pole

TB 09 02 264 x850

Blatt/ *page* /

Sub.