Chipsmall Limited consists of a professional team with an average of over 10 year of expertise in the distribution of electronic components. Based in Hongkong, we have already established firm and mutual-benefit business relationships with customers from,Europe,America and south Asia,supplying obsolete and hard-to-find components to meet their specific needs.

With the principle of “Quality Parts,Customers Priority,Honest Operation,and Considerate Service”,our business mainly focus on the distribution of electronic components. Line cards we deal with include Microchip,ALPS,ROHM,Xilinx,Pulse,ON,Everlight and Freescale. Main products comprise IC,Modules,Potentiometer,IC Socket,Relay,Connector.Our parts cover such applications as commercial,industrial, and automotives areas.

We are looking forward to setting up business relationship with you and hope to provide you with the best service and solution. Let us make a better world for our industry!

Contact us

Tel: +86-755-8981 8866 Fax: +86-755-8427 6832
Email & Skype: info@chipsmall.com Web: www.chipsmall.com
Address: A1208, Overseas Decoration Building, #122 Zhenhua RD., Futian, Shenzhen, China

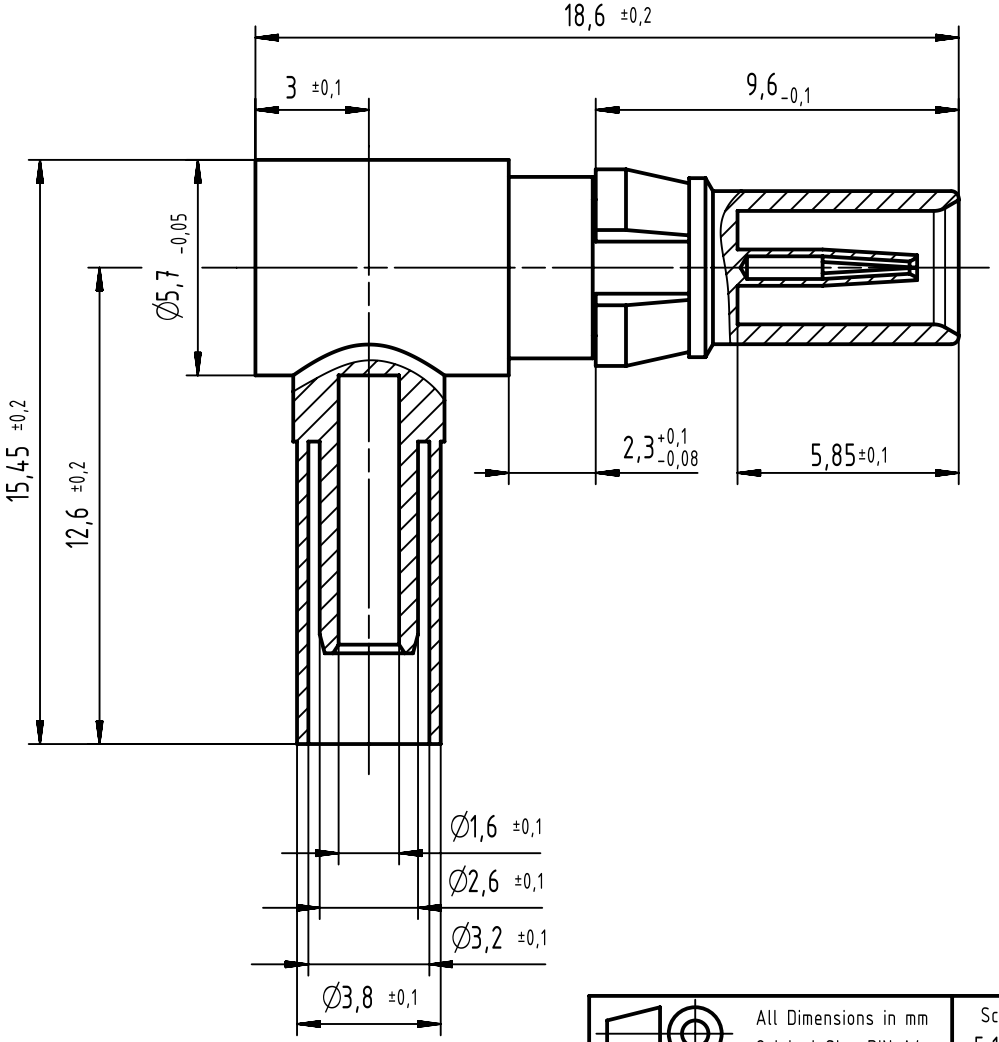

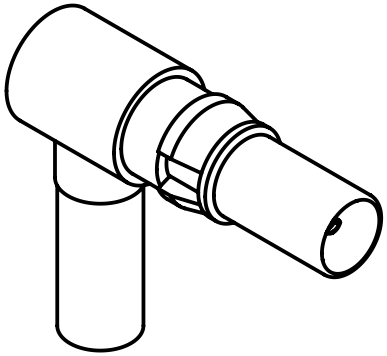

All Dimensions in mm Original Size DIN A4	Scale 5:1	Free size tol. DIN 41626-2		Ref. Sub. TB 09 03 000 6261 31654 10.10.03	
All rights reserved Department EC PD - DE	Created by ELLERMANN	Inspected by DAHMS	Standardisation HOFFMANN	Date 2013-12-18	State Final Release
HARTING Electronics GmbH D-32339 Espelkamp	Title DIN Signal fem contact coax 50 Ohm angl solder crimp				Doc-Key / ECM-Nr. 100072509/UGD/002/B 500000068957
	Type TB	Number 09030006261		Rev. B	Page 1/1

A4