Chipsmall Limited consists of a professional team with an average of over 10 year of expertise in the distribution of electronic components. Based in Hongkong, we have already established firm and mutual-benefit business relationships with customers from,Europe,America and south Asia,supplying obsolete and hard-to-find components to meet their specific needs.

With the principle of “Quality Parts,Customers Priority,Honest Operation,and Considerate Service”,our business mainly focus on the distribution of electronic components. Line cards we deal with include Microchip,ALPS,ROHM,Xilinx,Pulse,ON,Everlight and Freescale. Main products comprise IC,Modules,Potentiometer,IC Socket,Relay,Connector.Our parts cover such applications as commercial,industrial, and automotives areas.

We are looking forward to setting up business relationship with you and hope to provide you with the best service and solution. Let us make a better world for our industry!

Contact us

Tel: +86-755-8981 8866 Fax: +86-755-8427 6832
Email & Skype: info@chipsmall.com Web: www.chipsmall.com
Address: A1208, Overseas Decoration Building, #122 Zhenhua RD., Futian, Shenzhen, China

A
board drillings

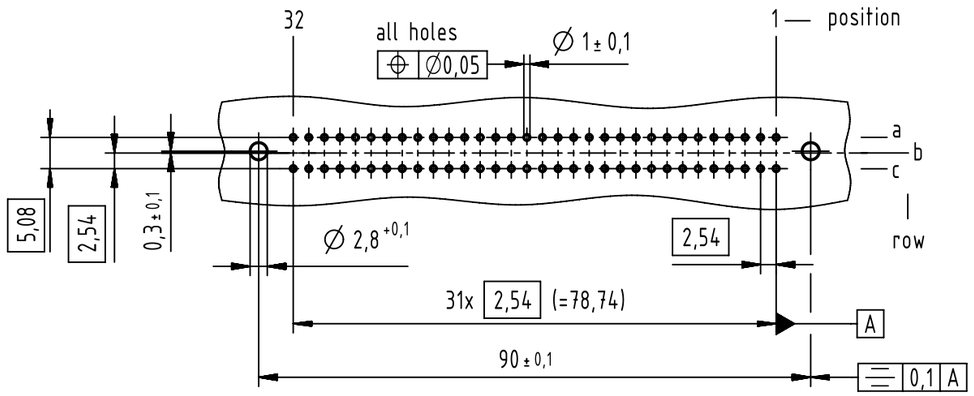

A
contact arrangement

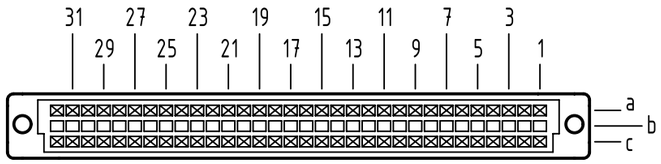

64 solder contacts

⊠ = position with contact

□ = position without contact

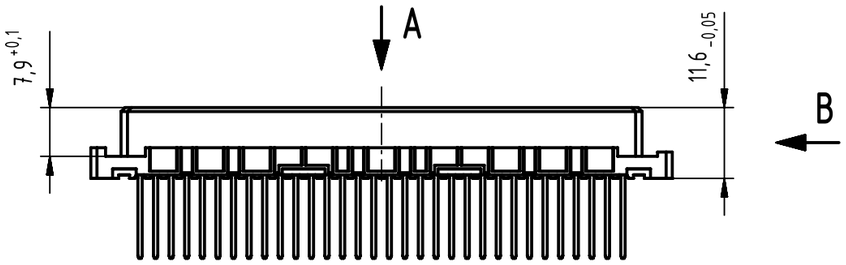

B (2:1)

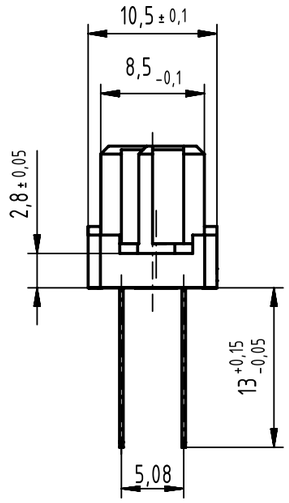

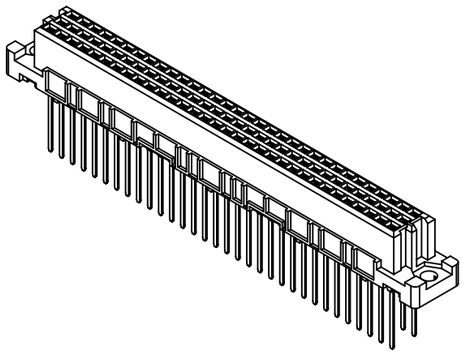

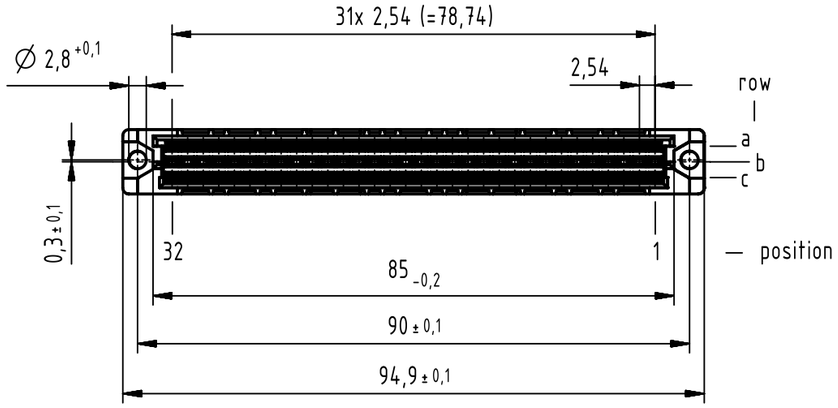

(1) further information see: DS 09032100001

09 03 264 6421	2
part-no	performance level (1)

All Dimensions in mm Original Size DIN A3	Scale 1:1	Free size tol. IEC 60603-2			Ref. Sub. TB 0903264X421 / Mod.32850 / 13.07.05
HARTING All rights reserved Department EC PD - DE	Created by ZWAHR	Inspected by LEHNERT	Standardisation HOFFMANN	Date 2014-12-11	State Final Release
HARTING Electronics GmbH D-32339 Espelkamp	Title DIN Signal type C female solder 13.0				Doc-Key / ECM-Nr. 100173852/UGD/249/D 500000082368
	Type TB	Number 0903264X421		Rev. D	Page 1/1

A3