Chipsmall Limited consists of a professional team with an average of over 10 year of expertise in the distribution of electronic components. Based in Hongkong, we have already established firm and mutual-benefit business relationships with customers from,Europe,America and south Asia,supplying obsolete and hard-to-find components to meet their specific needs.

With the principle of “Quality Parts,Customers Priority,Honest Operation,and Considerate Service”,our business mainly focus on the distribution of electronic components. Line cards we deal with include Microchip,ALPS,ROHM,Xilinx,Pulse,ON,Everlight and Freescale. Main products comprise IC,Modules,Potentiometer,IC Socket,Relay,Connector.Our parts cover such applications as commercial,industrial, and automotives areas.

We are looking forward to setting up business relationship with you and hope to provide you with the best service and solution. Let us make a better world for our industry!

Contact us

Tel: +86-755-8981 8866 Fax: +86-755-8427 6832
Email & Skype: info@chipsmall.com Web: www.chipsmall.com
Address: A1208, Overseas Decoration Building, #122 Zhenhua RD., Futian, Shenzhen, China

X

Kontaktanordnung

contact arrangement

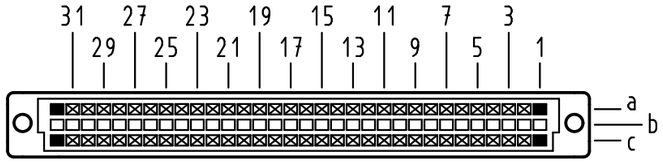

60 Einlöt-Kontakte
4 kinked Einlöt-Kontakte

60 solder-contacts
4 kinked solder-contacts

⊠ = Einlöt-Kontakt
= *solder-contact*

■ = kinked Einlöt-Kontakt
= *kinked solder-contact*

□ = Kontaktposition nicht belegt
= *position without contact*

Z (2:1)

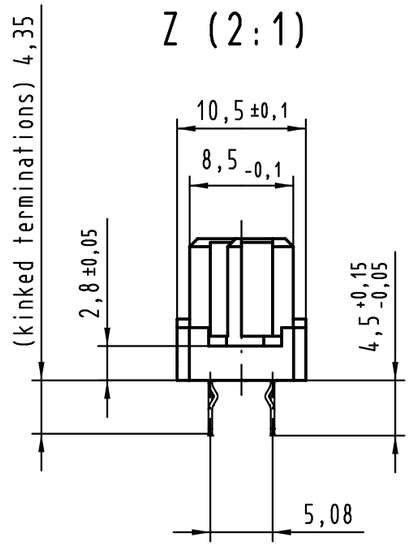

X

Lochbild

board drillings

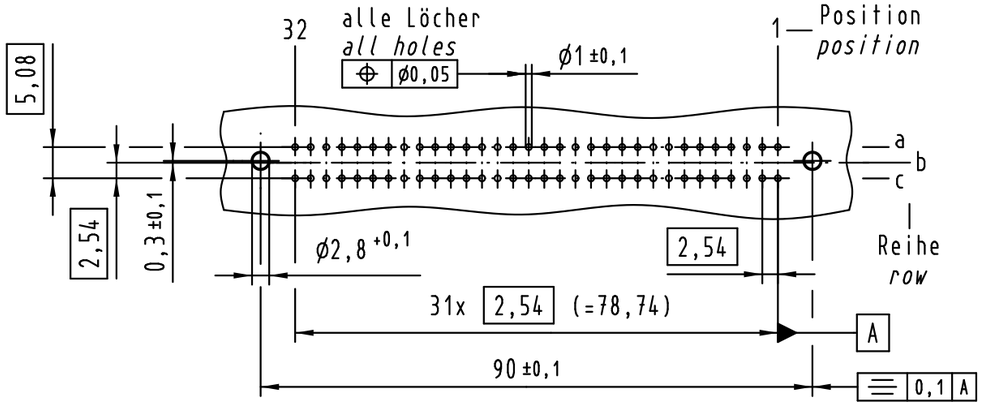

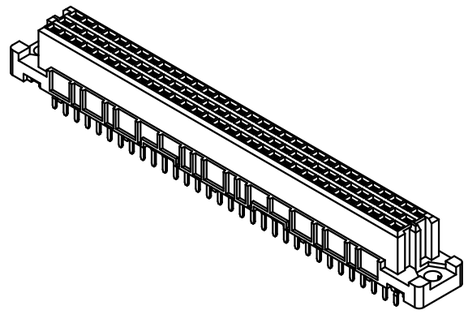

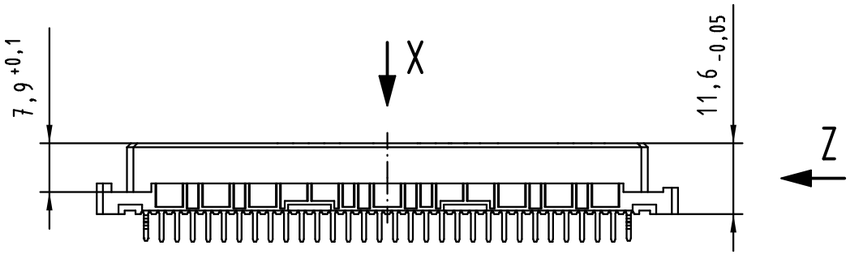

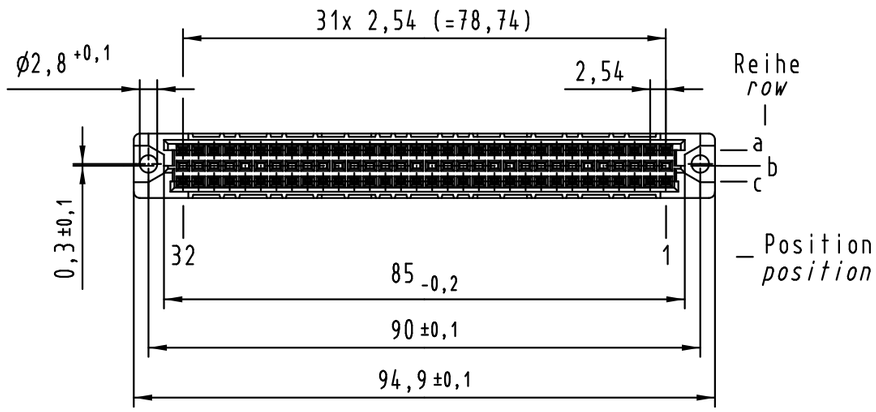

(1) weitere Informationen siehe: DS 09 03 210 00 01
further information see: DS 09 03 210 00 01

09 03 264 7845	3
09 03 264 6845	2
09 03 264 2845	1
Bestell-Nr. *part-no.*	Anforderungsstufe *performance level* (1)

			All Dimensions in mm Original Size DIN A 3	Techn. Character.			
					Dat.	Name	Maßstab/*Scale*
36400	04.07.11	Hage.		Detail.	03.09.99	Rie.	1:1
34650	27.08.07	Cla		Insp.	03.09.99	Pa.	
34158	18.01.07	LehT		Stand.			
30816	20.02.02	Rie.					
26083							
Mod.	Dat.	Name					

HARTING Electronics GmbH & Co. KG
D-32339 ESPELKAMP

Nicht tolerierte Maße/*Free size tolerances*
IEC 60603-2

har-bus C Federleiste
kinked Einlöt 4,5 , 64 pol.
har-bus C female connector
kinked solder 4,5 , 64 pol.

TB 09 03 264 x845

Blatt/*page* /

Sub.

Alle Rechte vorbehalten/ *All rights reserved*