Chipsmall Limited consists of a professional team with an average of over 10 year of expertise in the distribution of electronic components. Based in Hongkong, we have already established firm and mutual-benefit business relationships with customers from,Europe,America and south Asia,supplying obsolete and hard-to-find components to meet their specific needs.

With the principle of “Quality Parts,Customers Priority,Honest Operation,and Considerate Service”,our business mainly focus on the distribution of electronic components. Line cards we deal with include Microchip,ALPS,ROHM,Xilinx,Pulse,ON,Everlight and Freescale. Main products comprise IC,Modules,Potentiometer,IC Socket,Relay,Connector.Our parts cover such applications as commercial,industrial, and automotives areas.

We are looking forward to setting up business relationship with you and hope to provide you with the best service and solution. Let us make a better world for our industry!

Contact us

Tel: +86-755-8981 8866 Fax: +86-755-8427 6832
Email & Skype: info@chipsmall.com Web: www.chipsmall.com
Address: A1208, Overseas Decoration Building, #122 Zhenhua RD., Futian, Shenzhen, China

Alle Rechte vorbehalten/ All rights reserved

Y
Lochbild
board drillings

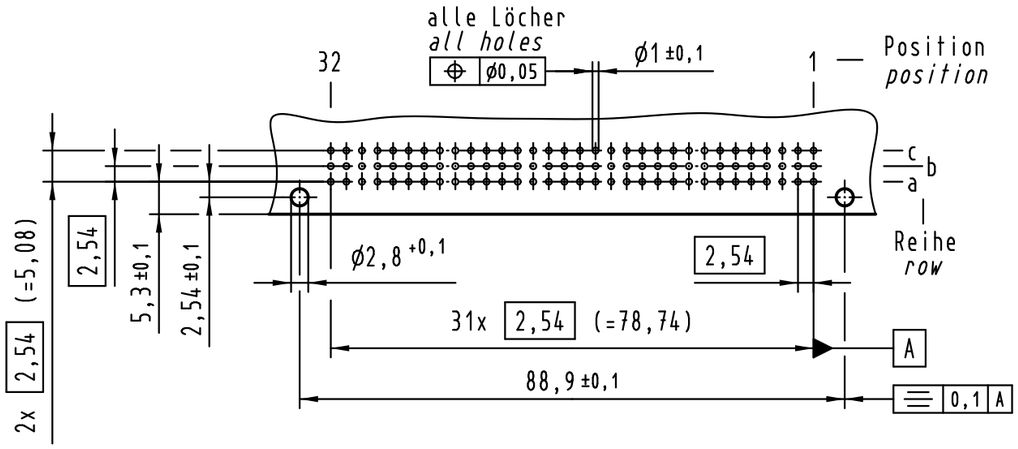

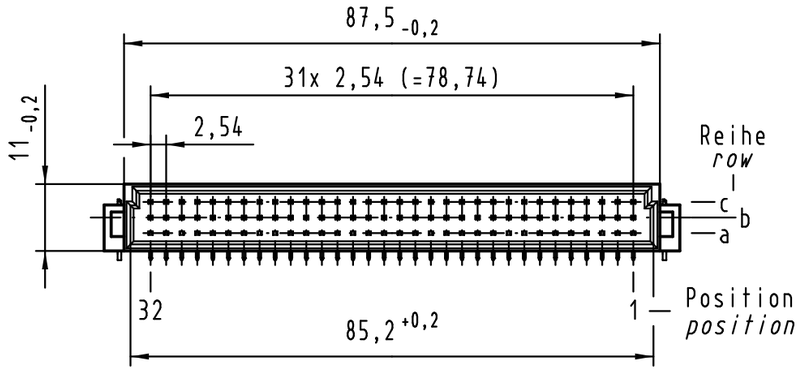

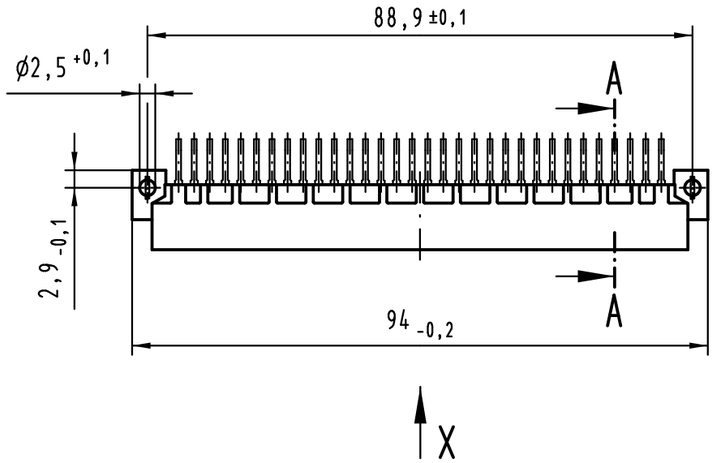

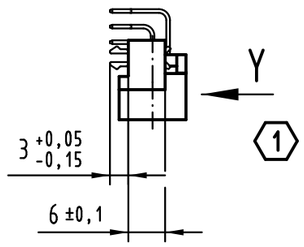

A-A (2:1)

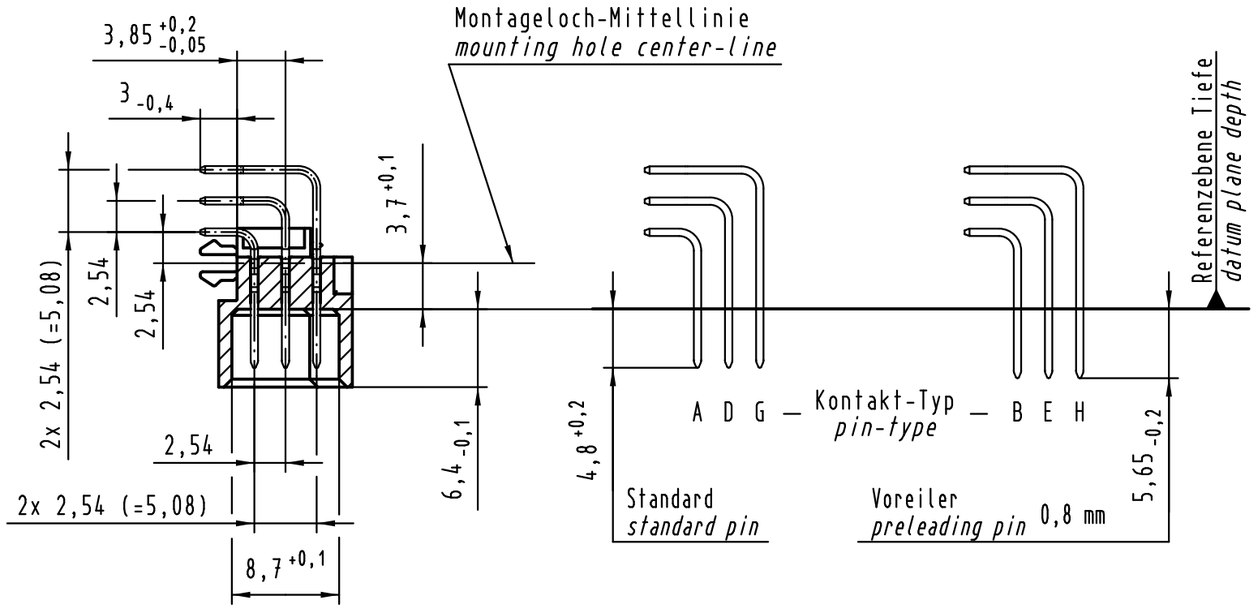

X Kontaktbelegung
contact loading

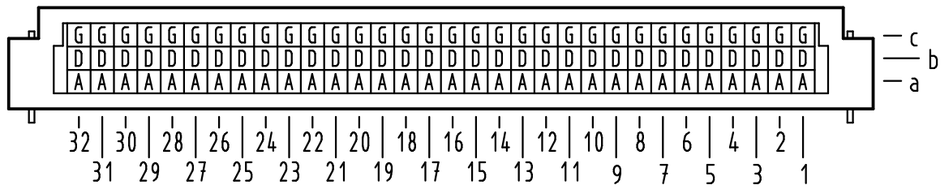

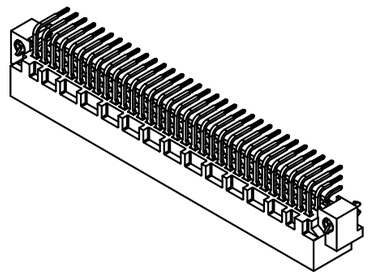

09 03 396 7921	3
09 03 396 6921	2
09 03 396 2921	1
Bestell-Nr. *part-no.*	Anforderungsstufe *performance level* (1)

(1) weitere Informationen siehe: DS 09 03 120 02 03
further information see: DS 09 03 120 02 03

All Dimensions in mm
Original Size DIN A 3

Techn. Character.

Nicht tolerierte Maße/*Free size tolerances*
IEC 60603-2

				Dat.	Name	Maßstab/*Scale*
36471	21.03.12	Hage.	Detail.	15.05.00	Rie.	1:1
36406	01.07.11	LehT	Insp.	15.05.00	Be.	
35345	22.10.08	Hage.	Stand.			
34650	05.12.07	Hage.				
27481						
Mod.	Dat.	Name				

Bauform / *type* C
Messerleiste Einlöt mit Clip 96-polig
male connector solder with clip 96-pole

HARTING Electronics GmbH & Co. KG
D-32339 ESPELKAMP

TB 09 03 396 x921

Blatt/*page* /

Sub.