Chipsmall Limited consists of a professional team with an average of over 10 year of expertise in the distribution of electronic components. Based in Hongkong, we have already established firm and mutual-benefit business relationships with customers from,Europe,America and south Asia,supplying obsolete and hard-to-find components to meet their specific needs.

With the principle of “Quality Parts,Customers Priority,Honest Operation,and Considerate Service”,our business mainly focus on the distribution of electronic components. Line cards we deal with include Microchip,ALPS,ROHM,Xilinx,Pulse,ON,Everlight and Freescale. Main products comprise IC,Modules,Potentiometer,IC Socket,Relay,Connector.Our parts cover such applications as commercial,industrial, and automotives areas.

We are looking forward to setting up business relationship with you and hope to provide you with the best service and solution. Let us make a better world for our industry!

Contact us

Tel: +86-755-8981 8866 Fax: +86-755-8427 6832
Email & Skype: info@chipsmall.com Web: www.chipsmall.com
Address: A1208, Overseas Decoration Building, #122 Zhenhua RD., Futian, Shenzhen, China

CAD GENERATED DRAWING - NO PENCIL CHANGES ALLOWED

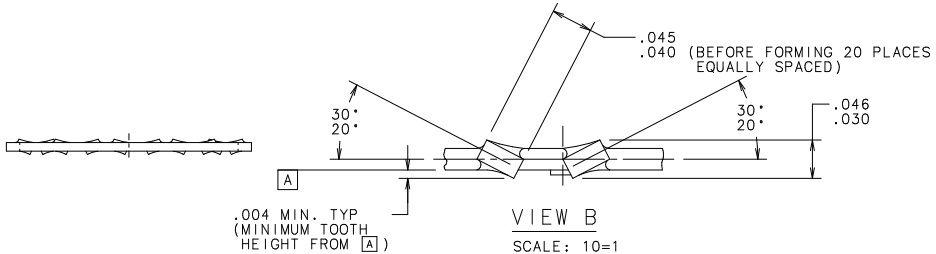

VIEW B

SCALE: 10=1

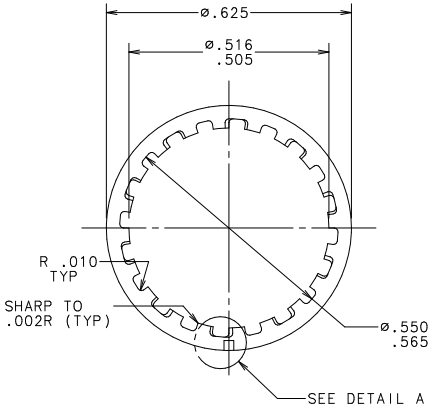

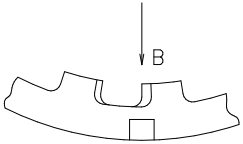

DETAIL A

SCALE: 10=1

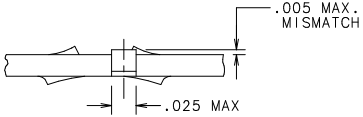

CARRIER TAB DETAIL

SCALE: 10=1

NOTES:
1. MATERIAL: .022 ±.001 THICK C.R. ANNEALED AISI-SAE 1050.
2. HEAT TREATMENT: HARDEN & TEMPER TO Rc 44-47.
3. ELECTRO-ZINC PLATE .0002/.0005 (SEE NOTE 4).
4. BAKE AT 375° ±25° F. FOR 4 HOURS - BAKING OPERATION TO BE DONE WITHIN 4 HOURS AFTER PLATING TO PROVIDE FOR HYDROGEN EMBRITTELMENT RELIEF.

UNLESS OTHERWISE SPECIFIED, DIMENSIONS DO NOT INCLUDE PLATING.

C DENOTES CRITICAL CHARACTERISTICS.

CPK DENOTES CPK DIMENSIONS.-MINIMUM CPK VALUE

DENOTES A CHARACTERISTIC THAT PROVIDES AN INDICATION OF PROCESS PERFORMANCE FOR MEASUREMENT AND TRACKING TO BE DEFINED IN LittelFuse INSPECTION INSTRUCTIONS.

STATISTICAL

DENOTES CP DIMENSIONS.-MINIMUM CP VALUE MUST BE WITHIN THE DIMENSIONAL LIMITATIONS SHOWN ON DRAWING AND INITIALLY LOCATED TO ALLOW FOR MAXIMUM TOOL LIFE.

NO	COMPONENT NO	DESCRIPTION	QTY/M	U/M

BILL OF MATERIAL

MATL SPEC	FINISH	SCALE
SEE NOTE 1	SEE NOTES 2, 3 & 4	4=1

		DATE	SUPER DRW
DRW	JMB	2/19/98	
CHK		DATE	
APPD		DATE	RAW STK WT LBS/M

COPIES TO: 1 9 18; 2 10 19; 3 12 20; 4 13 21; 5 14 23; 6 15 33; 7 16 43; 8 17 53

TOLERANCE UNLESS OTHERWISE SPECIFIED
TWO PLACE DEC ±.01 FRACTION ±
THREE PLACE DEC ±.005 ANGULAR ±1°

TITLE: LOCKWASHER (20 TOOTH)

Littelfuse® DES PLAINES, ILLINOIS 60016

REVISION: H

DRWG. NO. 905-023

LTR	REVISION	CHK	APD
G	39025C- REVISED & REDRAWN ON NEW FORMAT 3/13/98 JMB		
H	81022D-REMOVE 689487 FROM MAT'L SPEC. 01/26/01 PJM		

UNCONTROLLED DOCUMENT