Chipsmall Limited consists of a professional team with an average of over 10 year of expertise in the distribution of electronic components. Based in Hongkong, we have already established firm and mutual-benefit business relationships with customers from,Europe,America and south Asia,supplying obsolete and hard-to-find components to meet their specific needs.

With the principle of “Quality Parts,Customers Priority,Honest Operation,and Considerate Service”,our business mainly focus on the distribution of electronic components. Line cards we deal with include Microchip,ALPS,ROHM,Xilinx,Pulse,ON,Everlight and Freescale. Main products comprise IC,Modules,Potentiometer,IC Socket,Relay,Connector.Our parts cover such applications as commercial,industrial, and automotives areas.

We are looking forward to setting up business relationship with you and hope to provide you with the best service and solution. Let us make a better world for our industry!

Contact us

Tel: +86-755-8981 8866 Fax: +86-755-8427 6832
Email & Skype: info@chipsmall.com Web: www.chipsmall.com
Address: A1208, Overseas Decoration Building, #122 Zhenhua RD., Futian, Shenzhen, China

Number of contacts

160

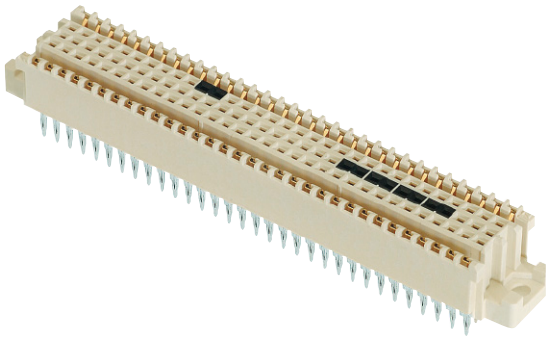

Female connectors

Identification	No. of contacts	Contact arrangement	Part number Performance level 2 according to IEC 61 076-4-113 Explanation chapter 00
Female connectors, straight with switches[2] with press-in terminations with flange 4.5 / 5 mm	160	z, a, b, c, d	02 03 160 2201

Dimensions

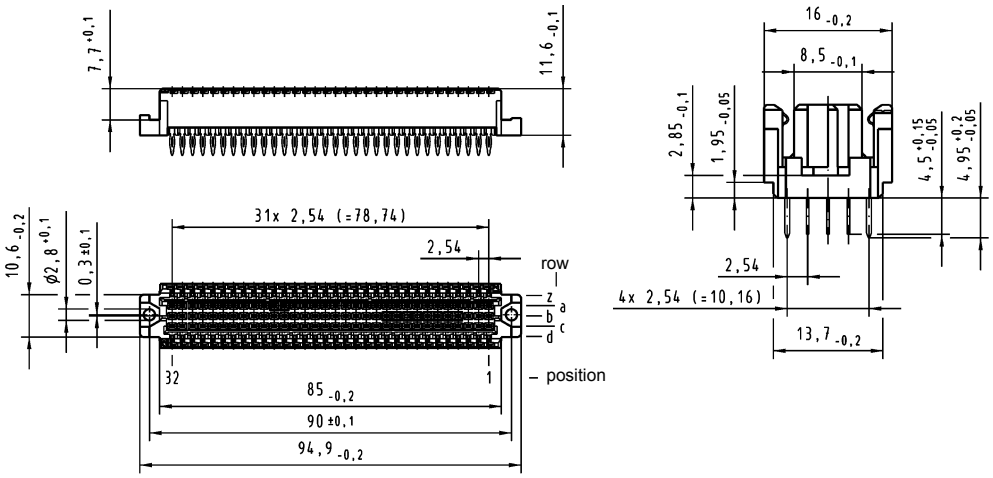

Board drillings

Mounting side

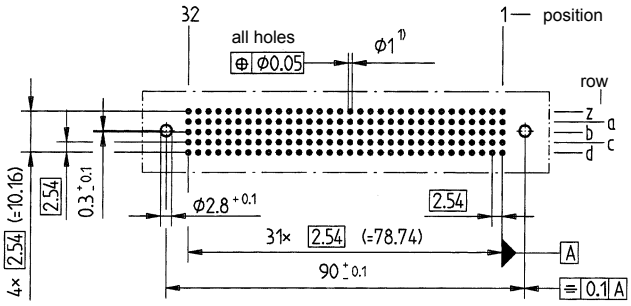

Dimensions in mm

Tooling see chapter 30

1) Press-in technology see page 00.25

2) Switching elements at positions a21-22, b4-5, b6-7, b8-9 and b10-11