Chipsmall Limited consists of a professional team with an average of over 10 year of expertise in the distribution of electronic components. Based in Hongkong, we have already established firm and mutual-benefit business relationships with customers from,Europe,America and south Asia,supplying obsolete and hard-to-find components to meet their specific needs.

With the principle of “Quality Parts,Customers Priority,Honest Operation,and Considerate Service”,our business mainly focus on the distribution of electronic components. Line cards we deal with include Microchip,ALPS,ROHM,Xilinx,Pulse,ON,Everlight and Freescale. Main products comprise IC,Modules,Potentiometer,IC Socket,Relay,Connector.Our parts cover such applications as commercial,industrial, and automotives areas.

We are looking forward to setting up business relationship with you and hope to provide you with the best service and solution. Let us make a better world for our industry!

# Contact us

Tel: +86-755-8981 8866 Fax: +86-755-8427 6832
Email & Skype: info@chipsmall.com Web: www.chipsmall.com
Address: A1208, Overseas Decoration Building, #122 Zhenhua RD., Futian, Shenzhen, China

Y

Lochbild
*board drillings*

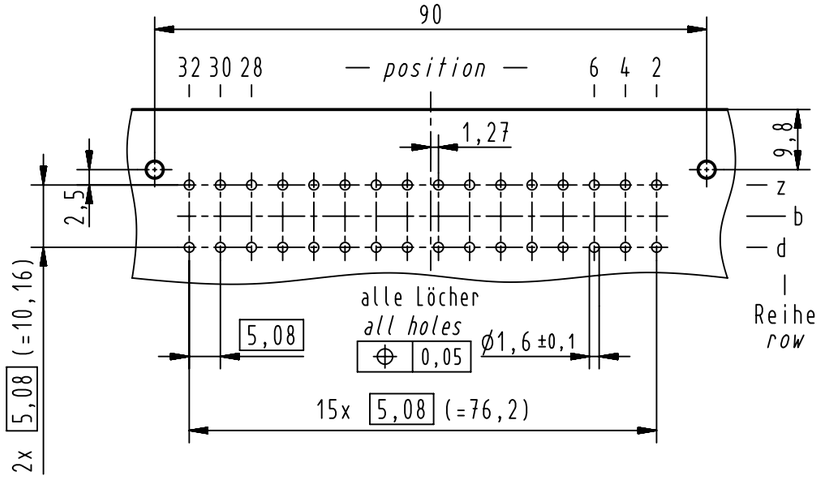


X

Kontaktanordnung
*contact arrangement*

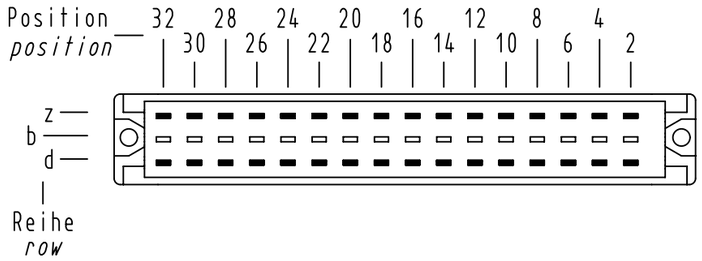


32 Einlöt Kontakte
*32 solder contacts*

▬ = Kontaktposition belegt
= *position with contact*

▭ = Kontaktposition nicht belegt
= *position without contact*

X

Z

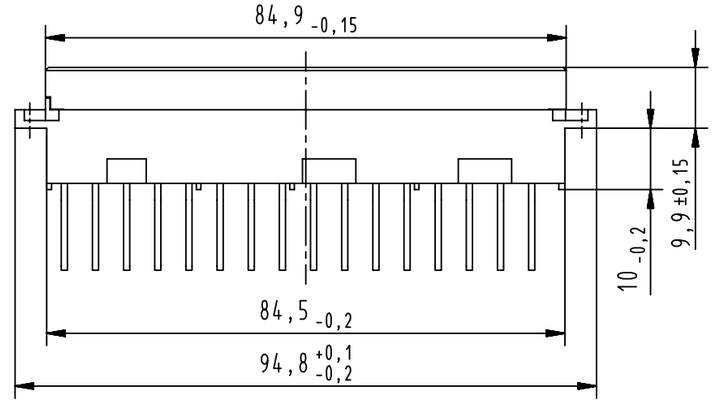


Z (2:1)
Ausführung II
*version II*

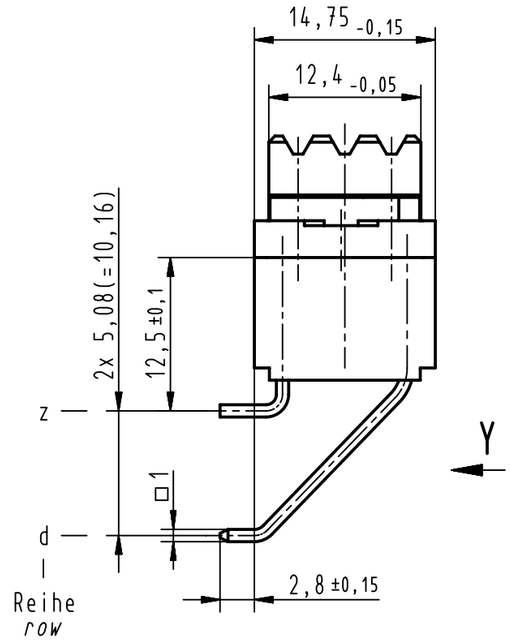


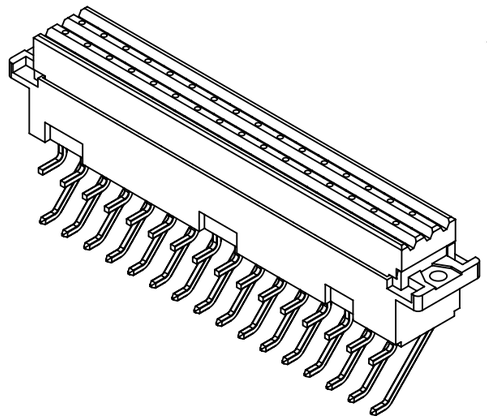

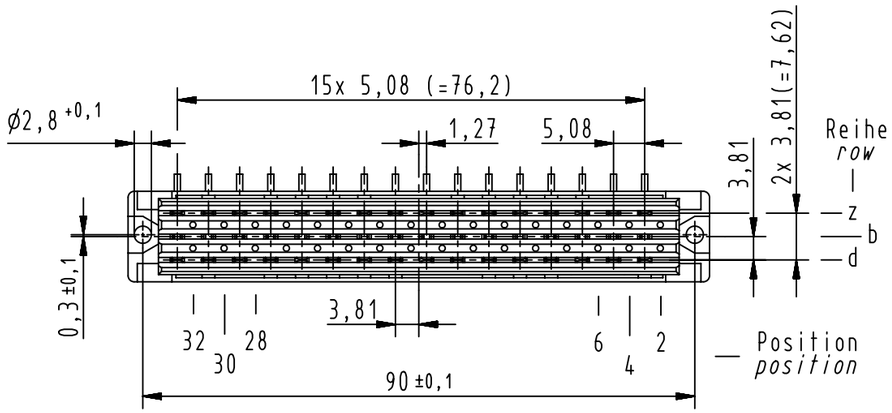


(1) weitere Informationen siehe: DS 09 06 220 02 01
*further information see: DS 09 06 220 02 01*

| | |
|---|---|
| 09 06 232 6836 | 2 |
| Bestell-Nr. *part-no.* | Anforderungsstufe *performance level* (1) |

| | | | | | |
|---|---|---|---|---|---|
| All Dimensions in mm Original Size DIN A3 | Scale 1:1 | Free size tol. complementary IEC 60603-2 | | Ref. Sub. TB 0906232X836 Mod. 32882 v. 12.12.05 | |
| HARTING | Created by HAGEMEYERE | Inspected by LEHNERT | Standardisation HOFFMANN | Date 2013-01-30 | State Final Release |
| All rights reserved / Department EC PD - DE | Title DIN Power type F female solder angled | | | | Doc-Key / ECM-Nr. 100212335/UGD/005/B 500000058142 |
| HARTING Electronics GmbH D-32339 Espelkamp | Type TB | Number 0906232X836 | | Rev. B | Page 1/1 |

A3