Chipsmall Limited consists of a professional team with an average of over 10 year of expertise in the distribution of electronic components. Based in Hongkong, we have already established firm and mutual-benefit business relationships with customers from,Europe,America and south Asia,supplying obsolete and hard-to-find components to meet their specific needs.

With the principle of “Quality Parts,Customers Priority,Honest Operation,and Considerate Service”,our business mainly focus on the distribution of electronic components. Line cards we deal with include Microchip,ALPS,ROHM,Xilinx,Pulse,ON,Everlight and Freescale. Main products comprise IC,Modules,Potentiometer,IC Socket,Relay,Connector.Our parts cover such applications as commercial,industrial, and automotives areas.

We are looking forward to setting up business relationship with you and hope to provide you with the best service and solution. Let us make a better world for our industry!

Contact us

Tel: +86-755-8981 8866 Fax: +86-755-8427 6832
Email & Skype: info@chipsmall.com Web: www.chipsmall.com
Address: A1208, Overseas Decoration Building, #122 Zhenhua RD., Futian, Shenzhen, China

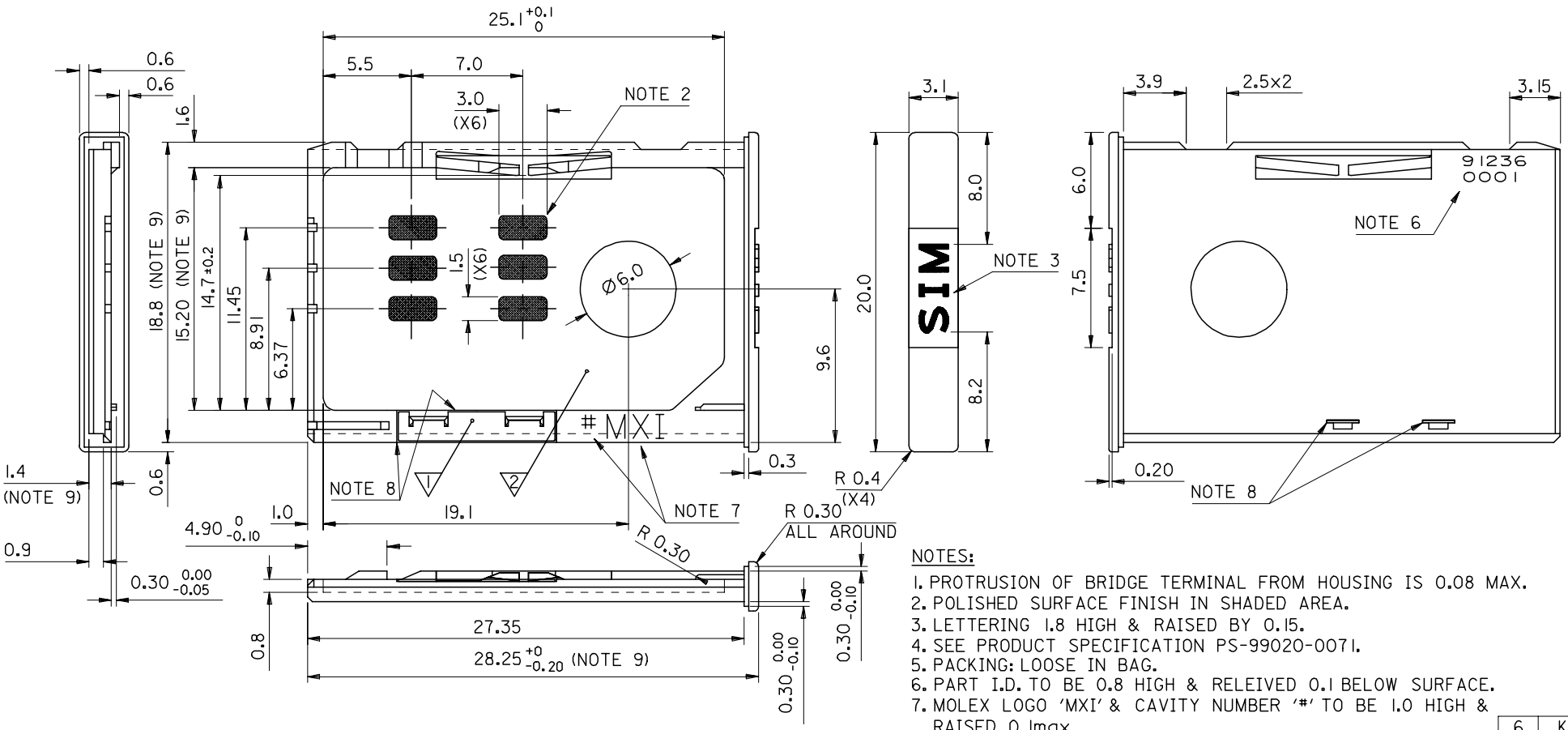

NOTES:

1. PROTRUSION OF BRIDGE TERMINAL FROM HOUSING IS 0.08 MAX.
2. POLISHED SURFACE FINISH IN SHADED AREA.
3. LETTERING 1.8 HIGH & RAISED BY 0.15.
4. SEE PRODUCT SPECIFICATION PS-99020-0071.
5. PACKING: LOOSE IN BAG.
6. PART I.D. TO BE 0.8 HIGH & RELEIVED 0.1 BELOW SURFACE.
7. MOLEX LOGO 'MXI' & CAVITY NUMBER '#' TO BE 1.0 HIGH & RAISED 0.1max.
8. BRIDGE TERMINAL MUST NOT PROTRUDE BEYOND EDGES SHOWN
9. APPLICABLE DIMENSIONS FOR PROCESS CAPABILITY STUDY

ITEM	COMPONENT	QTY	MATERIAL
1	TERMINAL	1	0.15 PHOSPHOR BRONZE 0.1um MIN Au OVER Pd/Ni IN CONTACT AREA
2	HOUSING	1	GF PBT, BLACK

6	K
5	F
4	G
3	J
2	G
1	M

MODIFY DIMENSION
EC NO: E2005-0317 2004/11/29
DRWN:FDUGGAN 2004/11/29
CH'KD: 2004/11/30
APPR:EFOLAN
DESCRIPTION
REV M

QUALITY SYMBOLS
▼=0
(C)=0

GENERAL TOLERANCES (UNLESS SPECIFIED)

	mm	INCH
4 PLACES	± ---	± ---
3 PLACES	± ---	± ---
2 PLACES	± 0.05	± ---
1 PLACE	± 0.10	± ---
ANGULAR ± 2 °		

DRAFT WHERE APPLICABLE MUST REMAIN WITHIN DIMENSIONS

DIMENSION STYLE: MM ONLY
SCALE: ---
DESIGN UNITS: METRIC
THIRD ANGLE PROJECTION

DRAWN BY: F INDORAK DATE: 00/08/28
CHECKED BY: DHANNON DATE: 00/08/28
APPROVED BY: MWILHITE DATE: 00/08/28

TITLE: CARD HOLDER

molex MOLEX INCORPORATED

MATERIAL NO.: 91236-0001
DOCUMENT NO.: SDA-91236
SHEET NO.: 1 OF 6
SIZE: A3

THIS DRAWING CONTAINS INFORMATION THAT IS PROPRIETARY TO MOLEX INCORPORATED AND SHOULD NOT BE USED WITHOUT WRITTEN PERMISSION