Chipsmall Limited consists of a professional team with an average of over 10 year of expertise in the distribution of electronic components. Based in Hongkong, we have already established firm and mutual-benefit business relationships with customers from,Europe,America and south Asia,supplying obsolete and hard-to-find components to meet their specific needs.

With the principle of “Quality Parts,Customers Priority,Honest Operation,and Considerate Service”,our business mainly focus on the distribution of electronic components. Line cards we deal with include Microchip,ALPS,ROHM,Xilinx,Pulse,ON,Everlight and Freescale. Main products comprise IC,Modules,Potentiometer,IC Socket,Relay,Connector.Our parts cover such applications as commercial,industrial, and automotives areas.

We are looking forward to setting up business relationship with you and hope to provide you with the best service and solution. Let us make a better world for our industry!

Contact us

Tel: +86-755-8981 8866 Fax: +86-755-8427 6832
Email & Skype: info@chipsmall.com Web: www.chipsmall.com
Address: A1208, Overseas Decoration Building, #122 Zhenhua RD., Futian, Shenzhen, China

Alle Rechte vorbehalten/ *All rights reserved*

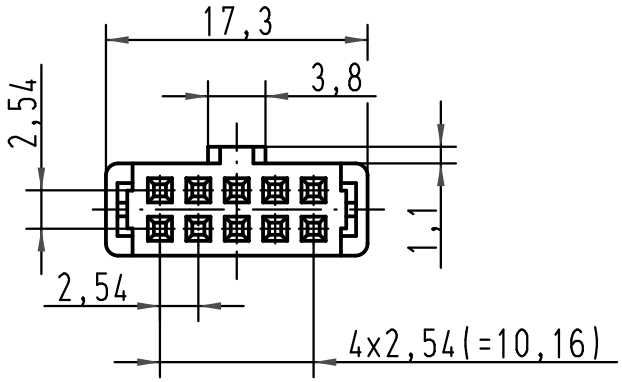

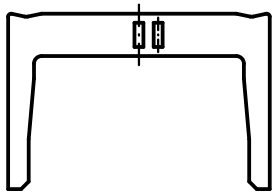

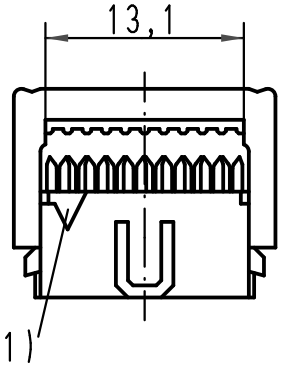

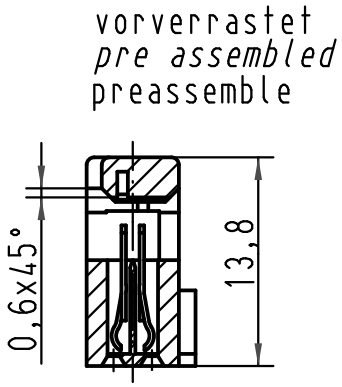

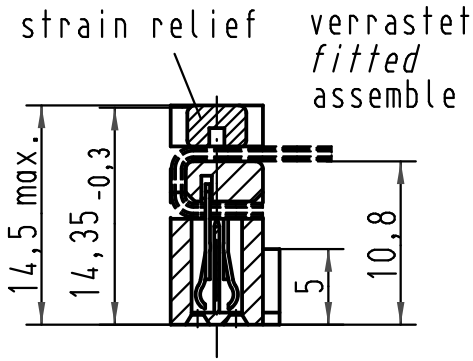

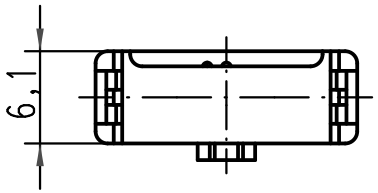

1) Markierung erster Kontakt, Ader 1 des Flachkabels
1) Contact no.1, 1st wire of flat cable
1) Contact no.1, repère 1 du câble

Bestell-Nr. *Part-No.* Reference	Anforderungsstufe *performance level* Niveau de qualite	Index Designation
09 18 510 5813 58U	0,76 µm Au	Bulk packaging MOQ = 3000 pcs
09 18 510 6813 58U	2	
09 18 510 7813 58U	3	
09 18 510 5813	0,76 µm Au	N.A
09 18 510 6813	2	N.A
09 18 510 7813	3	N.A

All Dimensions in mm
Original Size DIN A 4

Mod.	Dat.	Name
36265	30-SEP-11	BH
26570	01-FEB-00	JB

Techn. Character.

	Dat.	Name
Detail.	01-FEB-00	Th
Insp.	30-SEP-11	JB
Stand.		

Maßstab/*Scale* 2 : 1

Nicht tolerierte Maße/ *Free size tolerances*

SEK 18 Female connector
10 poles
with central polarisation
without cable stop
with strain relief

HARTING EURL
F-95972 Paris

TB 0918510X813

Sub.

Blatt/ *page* 1/1