Chipsmall Limited consists of a professional team with an average of over 10 year of expertise in the distribution of electronic components. Based in Hongkong, we have already established firm and mutual-benefit business relationships with customers from,Europe,America and south Asia,supplying obsolete and hard-to-find components to meet their specific needs.

With the principle of “Quality Parts,Customers Priority,Honest Operation,and Considerate Service”,our business mainly focus on the distribution of electronic components. Line cards we deal with include Microchip,ALPS,ROHM,Xilinx,Pulse,ON,Everlight and Freescale. Main products comprise IC,Modules,Potentiometer,IC Socket,Relay,Connector.Our parts cover such applications as commercial,industrial, and automotives areas.

We are looking forward to setting up business relationship with you and hope to provide you with the best service and solution. Let us make a better world for our industry!

Contact us

Tel: +86-755-8981 8866 Fax: +86-755-8427 6832
Email & Skype: info@chipsmall.com Web: www.chipsmall.com
Address: A1208, Overseas Decoration Building, #122 Zhenhua RD., Futian, Shenzhen, China

A
board drillings

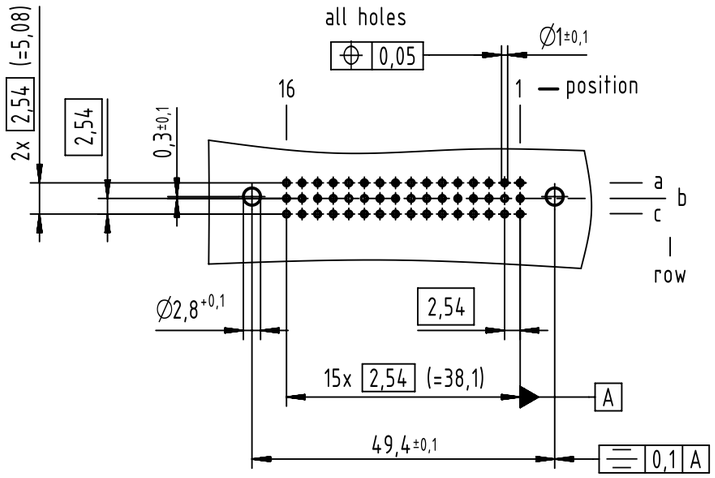

A
contact arrangement

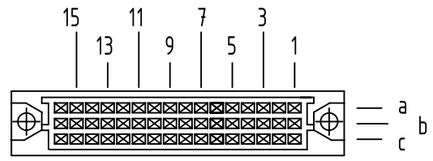

48 wire wrap contacts

☒ = position with contact

☐ = position without contact

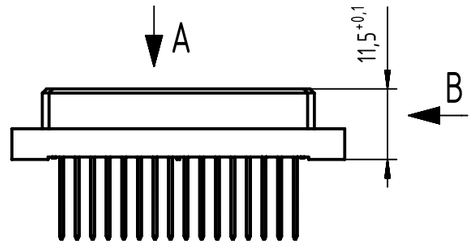

B(2:1)

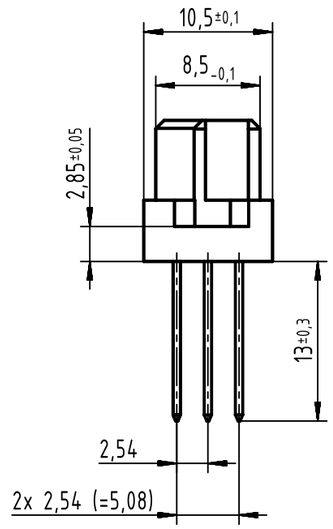

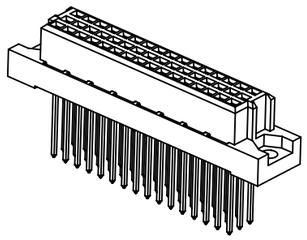

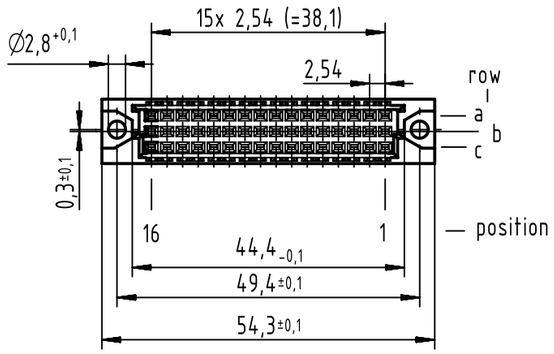

(1) further information see: DS 09032100005

09 23 248 6821	2
part-no.	performance level (1)

All Dimensions in mm Original Size DIN A3	Scale 1:1	Free size tol. IEC 60603-2			Ref. Sub. TB 0923248x821 / 30805 / 07.02.2002
All rights reserved	Created by HAGEMEYERE	Inspected by TADJE	Standardisation KOHLER	Date 2016-02-04	State Final Release
Department EC PD - DE	Title DIN Signal type 2C female WW 48-pole				Doc-Key / ECM-Nr. 100072938/UGD/031/B 500000100044
HARTING Electronics GmbH D-32339 Espelkamp	Type TB	Number 0923248X821		Rev. B	Page 1/1

A3