Chipsmall Limited consists of a professional team with an average of over 10 year of expertise in the distribution of electronic components. Based in Hongkong, we have already established firm and mutual-benefit business relationships with customers from,Europe,America and south Asia,supplying obsolete and hard-to-find components to meet their specific needs.

With the principle of “Quality Parts,Customers Priority,Honest Operation,and Considerate Service”,our business mainly focus on the distribution of electronic components. Line cards we deal with include Microchip,ALPS,ROHM,Xilinx,Pulse,ON,Everlight and Freescale. Main products comprise IC,Modules,Potentiometer,IC Socket,Relay,Connector.Our parts cover such applications as commercial,industrial, and automotives areas.

We are looking forward to setting up business relationship with you and hope to provide you with the best service and solution. Let us make a better world for our industry!

Contact us

Tel: +86-755-8981 8866 Fax: +86-755-8427 6832
Email & Skype: info@chipsmall.com Web: www.chipsmall.com
Address: A1208, Overseas Decoration Building, #122 Zhenhua RD., Futian, Shenzhen, China

B

board drillings

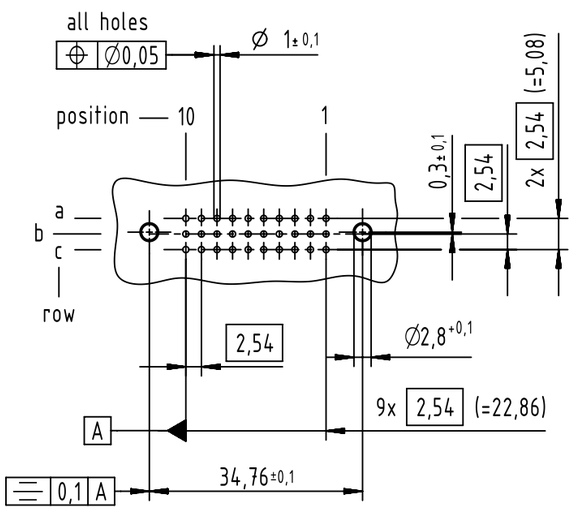

A-A (2:1)

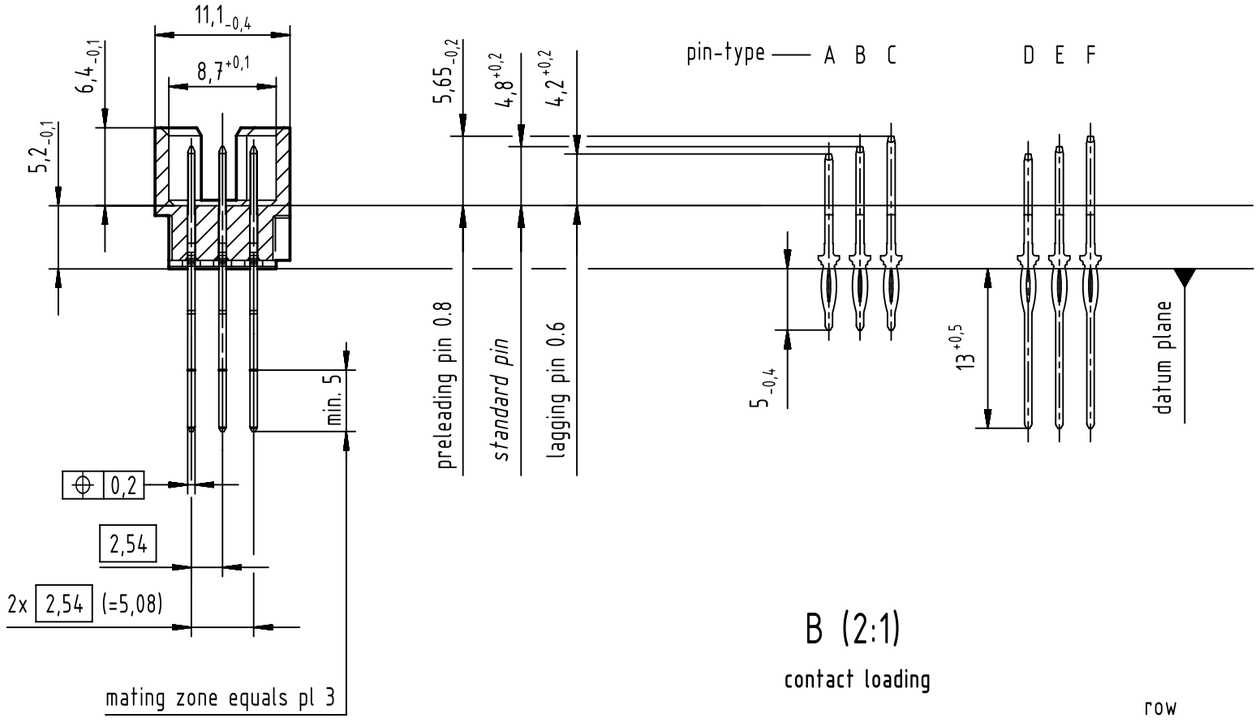

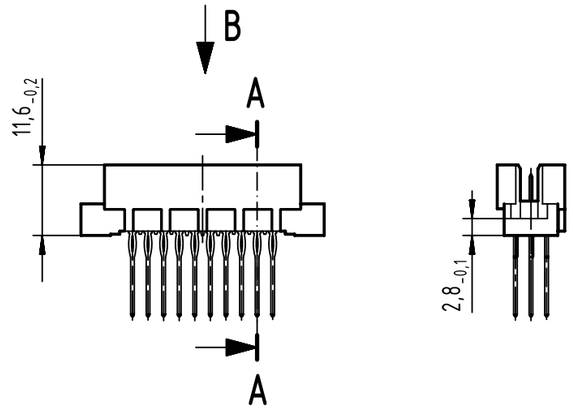

B (2:1)

contact loading

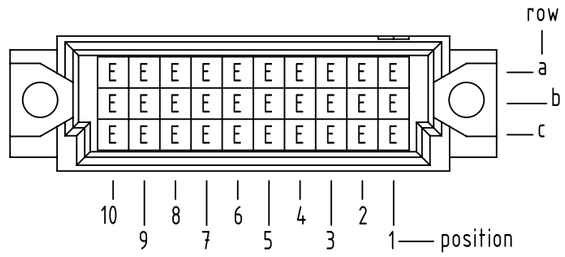

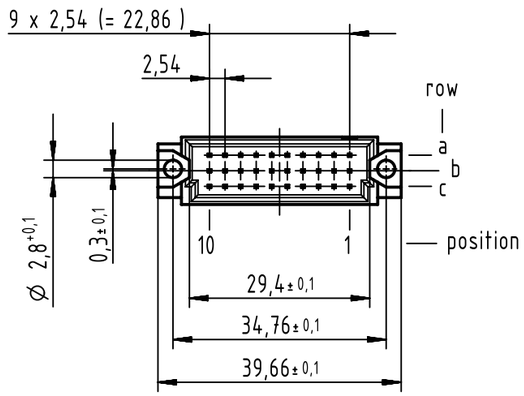

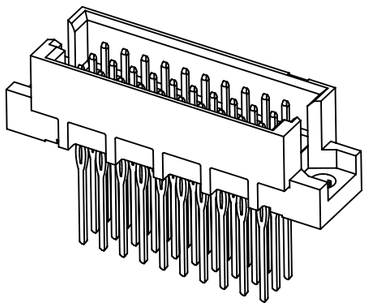

(1) recommended configuration of plated through holes and further information see: DS 09731100001

09 29 130 6974	2
part no.	performance level (1)

All Dimensions in mm Original Size DIN A3	Scale 1:1	Free size tol. complementary IEC 60603-2		Ref. / Sub.	
All rights reserved	Created by HASELOH	Inspected by JASCHKE	Standardisation HOFFMANN	Date 2013-11-22	State Final Release
Department EC PD - DE	Title DIN Signal type 3R male press-in 13mm 30-pole				Doc-Key / ECM-Nr. 100223818/UGD/008/A 500000068802
HARTING Electronics GmbH D-32339 Espelkamp	Type TB	Number 0929130X974		Rev. A	Page 1/1

A3